SOUTHERN
CaseArts

Installation, Maintenance, & Operation Guide

700 SERIES

Produce Pod Island Merchandisers

Case Family Type:
SAR-POD

800.552.6283 | southerncasearts.com

Table of Contents

General Information

Case Diagrams & Mechanicals 2-3
Receiving Cases 4
Apparent Loss or Damage 4
Concealed Loss or Damage 4
Exterior Loading 4
Handling of Cases 4
Store Conditions 4
General Information 5
Qualifying Case Standards 6-7

Installation Instructions

Locate Area of Placement 8
Marking Area on Floor 8
Leveling 8
Roll Case into Place 8
Set Other Cases into Place 9
Join Cases 9
Bolt Cases Together 9
Case Mechanical Connections 10
Shelving 10

Electrical Information

Wiring Diagrams 11-13
Led light fixture installation 14

Refrigeration Information

Superheat Settings 15-16
BTU Information 15
Defrost Settings 15
Electrical Ratings 15

Control Information

General Information 17
Diagrams 18
Parameter Information 19
Default Control Settings 20

Optional Equipment

Condensate Pumps 21-22

Air Flow & Product Loading

General Information & Diagram 23

Maintenance & Care Information

General Care and Cleaning 24
Exterior Surfaces 24
Interior Surfaces 24
Case Cleaning & Maintenance 24
Cleaning Honeycomb Assembly 24
Cleaning Plexiglass 24
Maintenance Schedule 25-26

Service

Trouble-Shooting Guide 27-28
Service Department 29
Parts 29
Maintenance Records 30-31

Limited Warranty & Compliance

Limited Warranty Information 32
Liabilty Notice 33

SOUTHERN
CaseArts
275 Drexel Road S.E.
Bessemer, AL 35022
Phone: 800.552.6283
Fax: 205.428.2552
southerncasearts.com

© 2017, Southern CaseArts, Inc. is a Southern Store Fixtures, Inc. company 800.552.6283

Case Diagrams & Mechanicals

FRONT VIEW - SAR-POD03

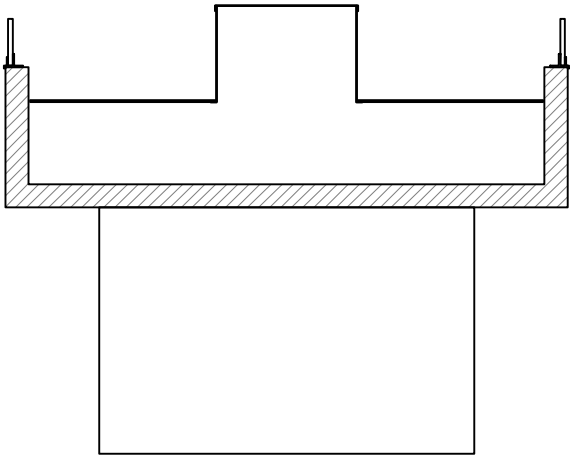

SECTION VIEW - SAR-POD01

Section Views

 © 2017 Southern CaseArts, Inc. is a Southern Store Fixtures, Inc. company 800.552.6283

Case Diagrams & Mechanicals

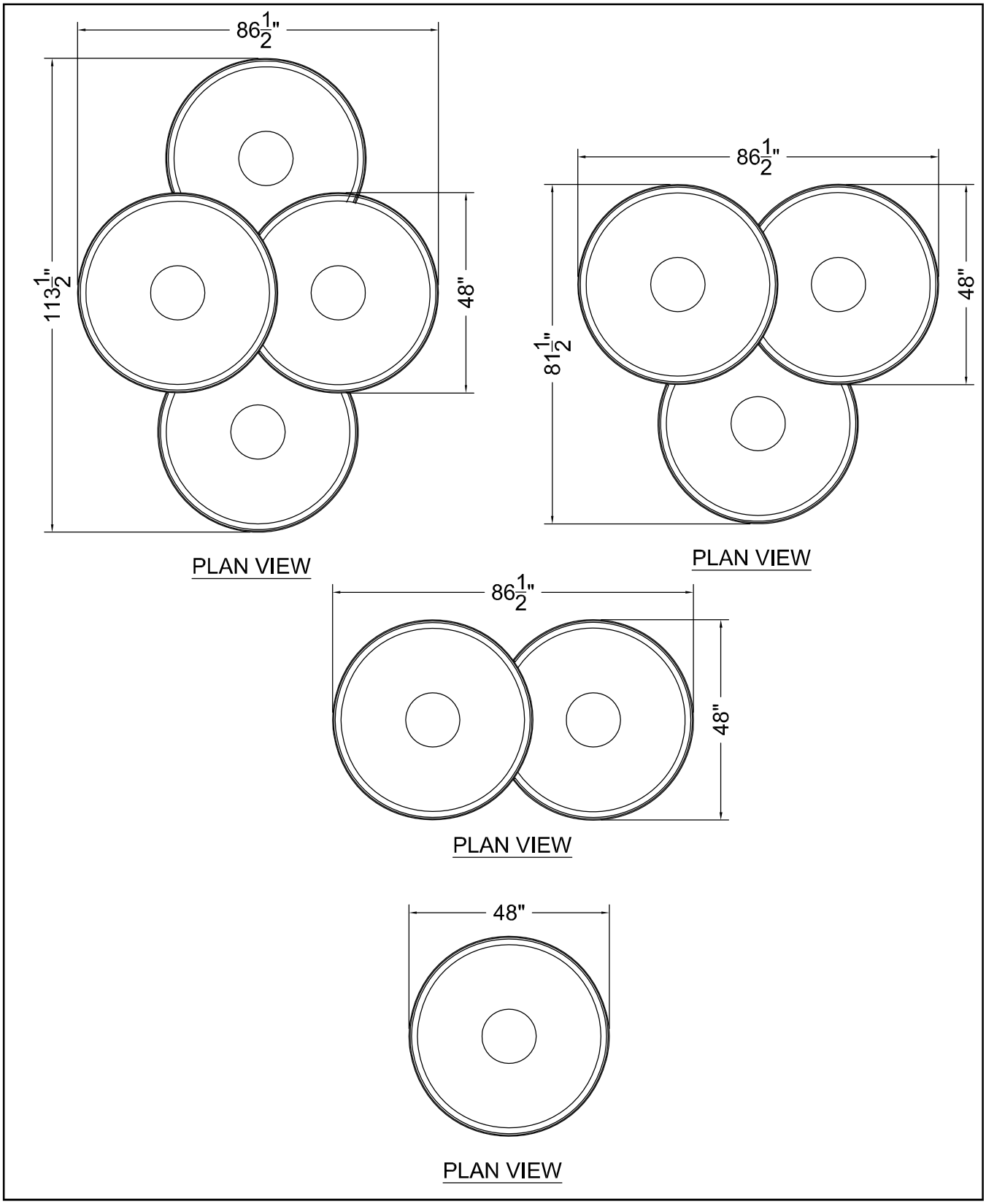

Plan Views

General Information

Receiving Cases
Transportation companies assume all liability from the time a shipment is received by them until the time it is delivered to the consumer. Southern CaseArts, Inc liability ceases at the time of shipment. All equipment should be thoroughly examined for shipping damage and/or shortages before and during unloading. This equipment has been carefully inspected at our factory. Any claim for loss or damage must be made to the carrier. The carrier will provide any necessary inspection reports and/or claim forms. For information on shortages, please contact the service parts department at 800.552.6283.

Apparent Loss or Damage
If there is an obvious loss or damage, it must be 1) noted on either the freight bill or the express receipt and 2) signed by the carrier's agent; otherwise, the carrier may refuse the claim.

Concealed Loss or Damage
When loss or damage is not apparent until after the equipment is unpacked or uncrated, retain all packing materials and submit a written request to the carrier for inspection within 15 days of receipt of equipment.

Exterior Loading
DO NOT WALK OR STAND ON TOP OF DECKS, SHELVES, OR CASES FOR ANY REASON or damage to the cases and serious personal injury could occur. THEY ARE NOT STRUCTURALLY DESIGNED TO SUPPORT EXCESSIVE EXTERNAL LOADING such as the weight of a person. **DO NOT PLACE HEAVY OBJECTS ON THE CASE**. If work is to be done above the fixture then ladders and/or scaffolding must be used.

Handling of Cases
Southern CaseArts' remote series of cases are shipped to stores with dollies on casters placed beneath the base frame. From loading to unloading and placement to installation, we strive to ensure that moving our cases is easy for everyone involved. In most instances, one or two persons can move the cases with ease. Our self-contained series of cases, unless otherwise specified when ordering, are generally manufactured with heavy-duty casters mounted permanently to the base frame for ease of mobility when unloading and when moving around for placement in the store. If a forklift or pallet jack is used to move the case, use a spotter to guide forks in place to prevent damage to electrical, plumbing, and refrigeration lines. **DO NOT PUSH OR PULL ON ANY GLASS COMPONENTS OF THE CASE**. Glass breakage may result in serious injury.

Store Conditions
Southern CaseArts' refrigerated standard display cases are designed for use in Class 1 air-conditioned stores, where the temperature does not exceed 75° F and the relative humidity does not exceed 55%.
Air conditioning, fans, ovens, drafts, direct sunlight or anything that could disturb the air inside the case could result in poor performance.

 © 2017 Southern CaseArts, Inc. is a Southern Store Fixtures, Inc. company 800.552.6283

General Information

Display cases described in this operation guide are part of the 700 series of product displays provided by Southern CaseArts, Inc. This guide covers the following product display models: SAR-POD. These cases are not designed to cool down products but are designed to maintain the safe temperature of the product once placed in the case.

- Keep products at food safe temperature prior to loading them into the case.
- Allow the case to operate a minimum of 4 hours before loading with product.
- Do not place any product into a display case until it is at operating temperature.
- Discharge air plenum and return air grill must not be blocked or restricted - the case may not operate properly. Overloading the case may impair the proper operation of the case.
- For self-contained models, the air intake grill and discharge vent must be clear of obstructions or the case will not operate properly. The air intake grill has an air filter that needs to be cleaned monthly or more frequently if required.
- For cases equipped with an electric condensate dissipater pan. Electric dissipater pans are meant solely for the purpose of evaporating condensate water released from the refrigeration coil during the defrost cycle. Dust, food products, grease, caustic liquids, flammable materials, wash water and/or cleaning chemicals should not be allowed to accumulate in the pan. Regular monthly maintenance should be performed to make sure the pan is clean and the float switch moves up and down freely. Failure to follow these guidelines could result in flooding, overheating, and/or a fire hazard, all of which will void the warranty.
- These cases require a dedicated circuit with proper sized wire for the distance from the electric panel.
- Cases equipped with electric dissipater pans should **never** have food products washed or poured into the case tub drain, as it will result in damage to the heating element.
- Southern CaseArts' refrigerated standard display cases are designed for use in air conditioned stores, where the temperature and relative humidity do not exceed 75° F and 55% RH.
- When utilizing refrigerated self-service or open case merchandising, the following should be considered: 1) Air conditioning ducts that are positioned or blowing directly into an open case will impair case performance. Also, any air current from prep areas or ceiling fans can impair the performance of a case. 2) Ovens or other forced-air heating systems placed near the case can affect the case air curtain and impair the temperature performance of the case.
- **DO NOT WALK ON TOP OF THE CASE.** These cases are not designed or built in standard models to support extra weight on top. Heavy weight placed on top of the case may cause damage to the case as well as personal injury.
- **DO NOT TILT SELF-CONTAINED CASES** more than 15° from vertical when setting in place. Compressors may be damaged. Compressor warranty may be voided. If the self-contained case has been tilted, wait at least 24 hours before turning the case on.
- **DO NOT USE RUNNING WATER ON CASES EQUIPPED WITH A CONDENSATE PUMP**. It is important to not introduce more water than the case condesate pump can handle. The case must be routinely wiped out and cleaned by hand or the pump can be damaged and cause flooding or personal injury. See care instructions for these pumps in optional equipment.

© 2017, Southern CaseArts, Inc. is a Southern Store Fixtures, Inc. company 800.552.6283

General Information

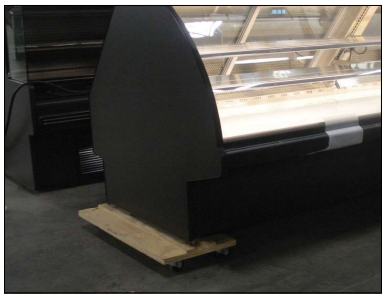

These cases, unless otherwise specified are shipped on dollies for ease of unloading. If the loading dock is level with the truck, the cases can be rolled off the truck and into the store.

WARNING

Use caution and keep hands out of the way when lifting the case to remove dolly! FAILURE TO DO SO COULD RESULT IN SERIOUS INJURY!

CAUTION

Be careful around pinch points they can cause bodily harm!

When moving a case without casters into position, it is recommended to only use a jack bar and dollies. Cases have a wide variety of electrical , drain and refrigerant connections under the case and may be damaged by moving the cases.

Case Industry Standards

The 700 Family of cases conform to the following standards:

c ETL US LISTED Intertek

ETL SANITATION LISTED Intertek

Installation Instructions

WARNING

Do not push or pull on any glass components of the case. Glass breakage may result in serious injury!

IMPORTANT

If forklifts or pallet jacks are used to move cases, use a spotter to guide forks into place to prevent damage to electrical, plumbing, and refrigeration lines.

Southern CaseArts' remote series of cases are shipped to stores with dollies on casters placed beneath the base frame. From loading to unloading and placement to installation, we strive to ensure that moving the cases is easy for everyone involved. In most instances, one or two people may move the cases with ease. Our self-contained series of cases, unless otherwise specified when ordering, are generally always manufactured with heavy-duty casters mounted permanently to the base frame for ease of mobility when unloading and when moving around for placement in the store. If a forklift or pallet jack is used to move cases use a spotter to guide forks into place to prevent damage to electrical, plumbing, and refrigeration lines. **DO NOT PUSH OR PULL ON ANY GLASS COMPONENTS OF THE CASE**. Glass breakage may result in serious injury.

© 2017 Southern CaseArts, Inc. is a Southern Store Fixtures, Inc. company 800.552.6283

WARNING

Do not place self-contained version of this unit equipped with an electric evaporator pan near or under any flammable structure or flammable merchandise! This could result in a fire hazard!

Southern CaseArts' refrigerated standard display cases are designed for use in air-conditioned stores, where the temperature does not exceed 75° F and the relative humidity does not exceed 55%.
Air conditioning, fans, ovens, spot lights, direct sunlight or anything that could disturb the airflow inside the case could result in poor performance.

CAUTION

Do NOT walk on top of the case.
These cases are not designed or built in standard models to support extra weight on top. Heavy weight placed on top of the case may cause damage to the case as well as personal injury.

DO NOT WALK OR STAND ON TOP OF DECKS, SHELVES, OR CASES FOR ANY REASON and serious personal injury could occur. **THEY ARE NOT STRUCTURALLY DESIGNED TO SUPPORT EXCESSIVE EXTERNAL LOADING** such as the weight of a person. **DO NOT PLACE HEAVY OBJECTS ON THE CASE**. If work is to be done above the fixture then ladders and/or scaffolding must be used.

IMPORTANT

It is the installer resonsibility to install the case to meet all local buuilding and health codes.

IMPORTANT

If the correct lift points are not identified prior to removal. Look for the supports under the unit before removing pallet. If not removed, it will damage the finished metal.

IMPORTANT

Remove all styrofoam shipping blocks from case. Failure could result in case damage.

IMPORTANT

Installation of 3rd-party material may result in improper case performance

Installation Instructions

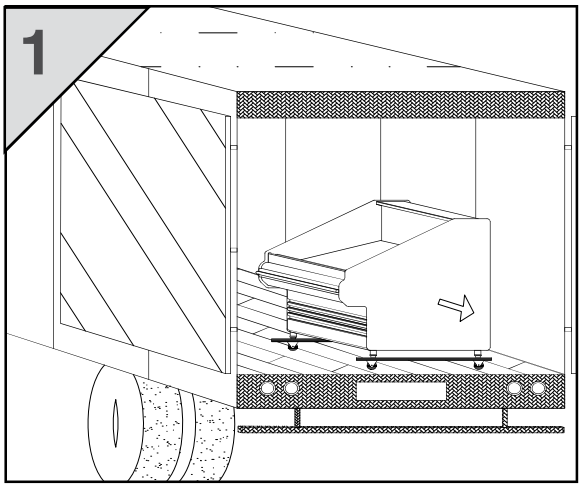

Locate and verify placement of cases inside the store building. Unload and move cases as close as possible to their final location. Verify that no changes have been made to area and that blueprints are still current. Find points of reference to take dimensions to help locate the cases.

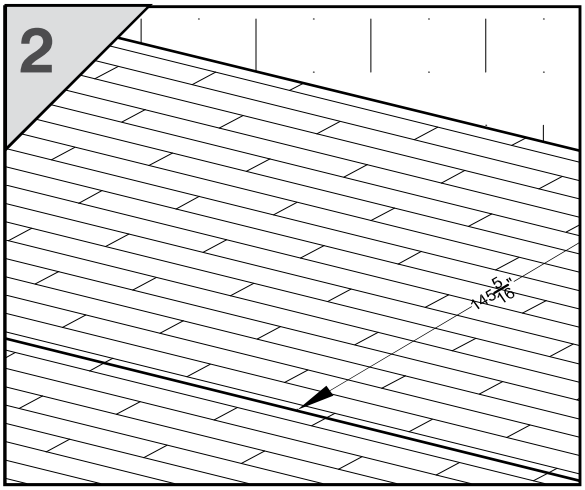

Mark the floor where cases are to be located for the entire lineup.

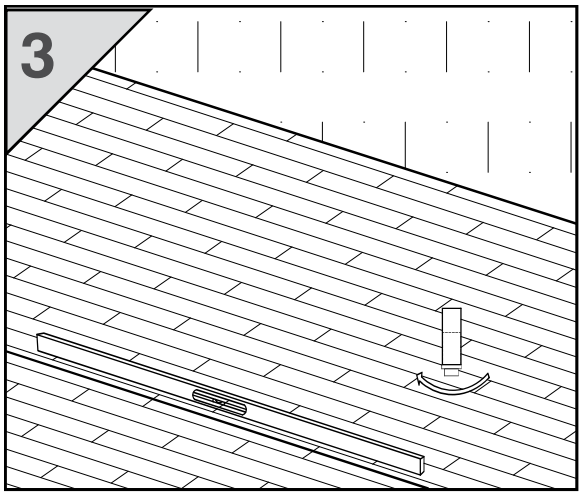

Leveling is very important and necessary to ensure proper case alignment when installing. **Improper leveling can affect the refrigeration systems and lead to improper drainage of defrost water**. To ensure proper leveling, locate the highest point on the chalk line as a reference to determine the height the leveler legs need adjusting.

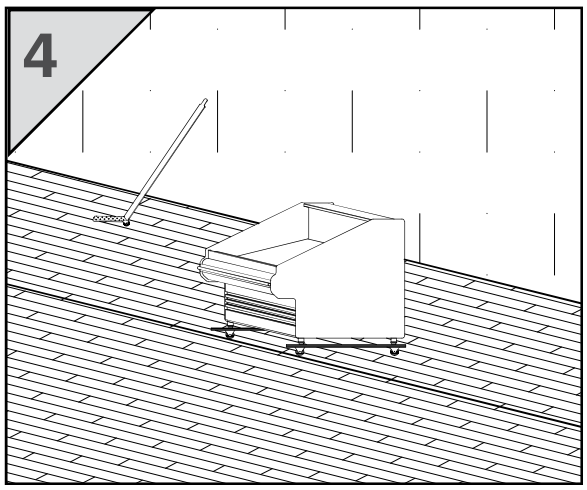

Roll the first case into position. Use a jack bar and place it on the underside of the heavy-duty steel frame to lift the case and remove all dollies. **CAUTION - KEEP HANDS OUT OF THE WAY AT ALL TIMES TO AVOID INJURY.**

 © 2017 Southern CaseArts, Inc. is a Southern Store Fixtures, Inc. company 800.552.6283

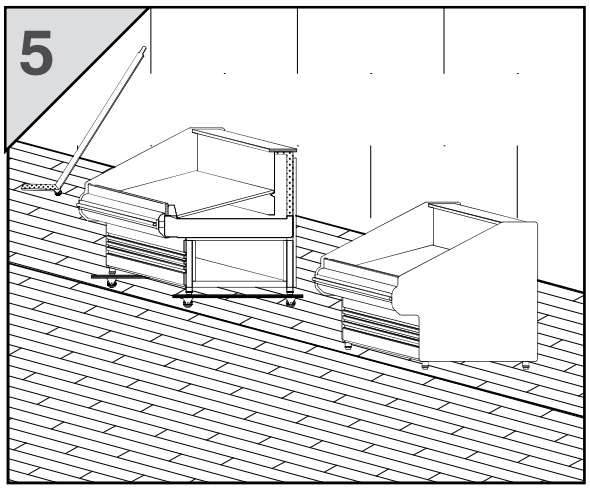

Roll the next case into position leaving a few feet in between from the adjoining case for maneuvering. Repeat **step 4** for removing dollies from beneath the case. **CAUTION - KEEP HANDS OUT OF THE WAY AT ALL TIMES TO AVOID INJURY.**

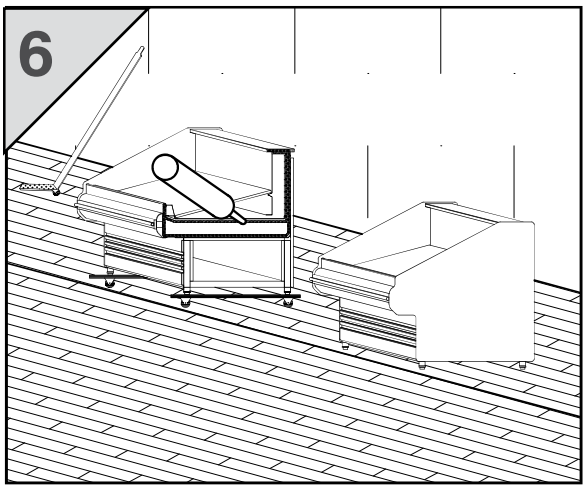

Remove anything from the case that could interfere with the case joining. Run a bead of sealant around the entire end before pushing cases together tightly. Make sure all alignment pins are in place before running a bead of sealant and pushing the case together.

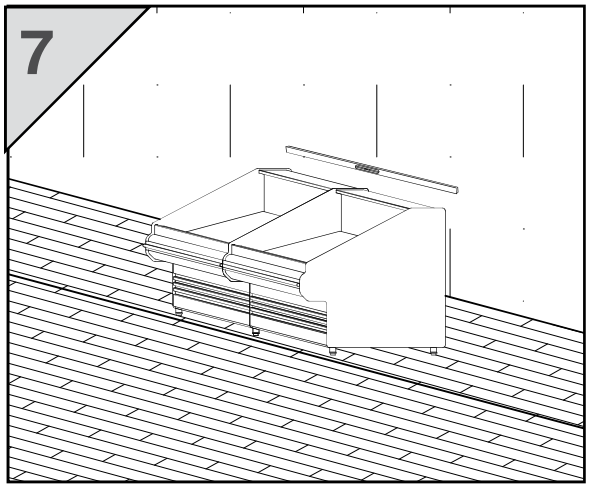

MAKE SURE AND LEVEL ALL CASES. For shipment, the leveler legs on the cases are run all the way out. **IT IS VERY IMPORTANT TO SCREW THE LEVELER LEGS ALL THE WAY IN BEFORE LEVELING THE CASE. WHEN THE CASE IS LEVEL MAKE SURE ALL THE LEVELER LEGS ARE SECURE TO THE FLOOR.**

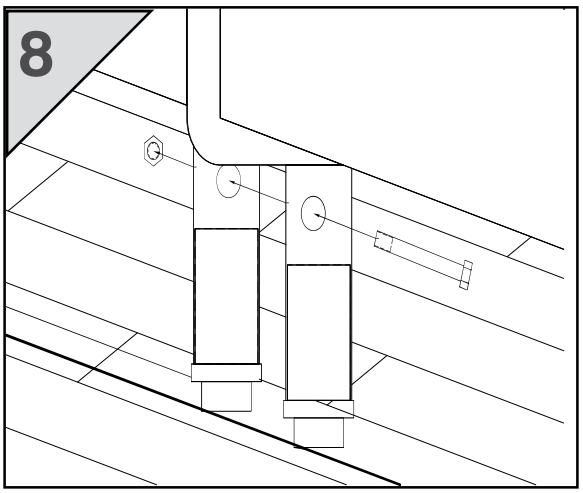

Push cases tightly together and bolt them through the holes provided. Tighten until all margins are equal. DO NOT OVER TIGHTEN. Repeat **steps 4-8** until entire line-up is set.

© 2017, Southern CaseArts, Inc. is a Southern Store Fixtures, Inc. company 800.552.6283

Installation Instructions

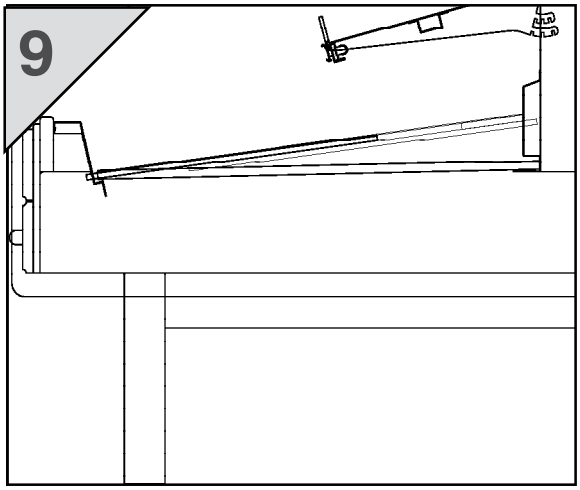

Make sure all the shelves are securely in position and the plugs for the shelf lights are plugged in all the way. Install any joint caps sent with the case.

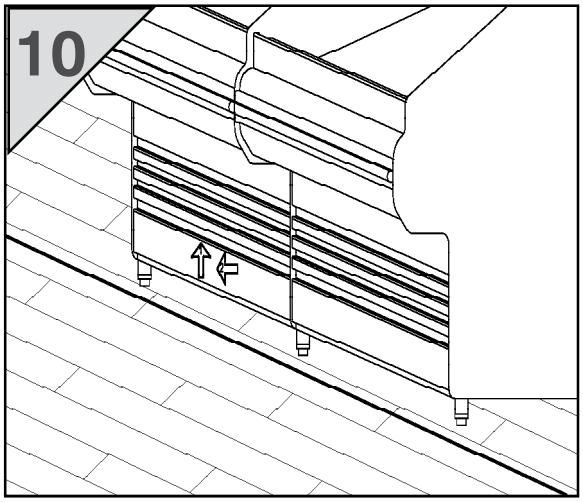

After the mechanical connections are made all penetrations must be sealed and all panels and kick plates must be installed. If 90% of the floor under case cannot be accessed by a 1.5” diameter rod for cleaning then silicone kick plate to floor.

WARNING

Make sure all shelves with lights are plugged in all the way and seated completely. Unused receptacles must have the cover pushed all the way in and seated completely! Failure to do this could result in arcing, possible fire, or safety hazzards!

IMPORTANT

That all the piping connections are compliant with local codes.

IMPORTANT

Necessary when brazing wet rag around the area to avoid any damage.

IMPORTANT

Remove all styrofoam shipping blocks from case. Failure could result in case damage.

© 2017 Southern CaseArts, Inc. is a Southern Store Fixtures, Inc. company 800.552.6283

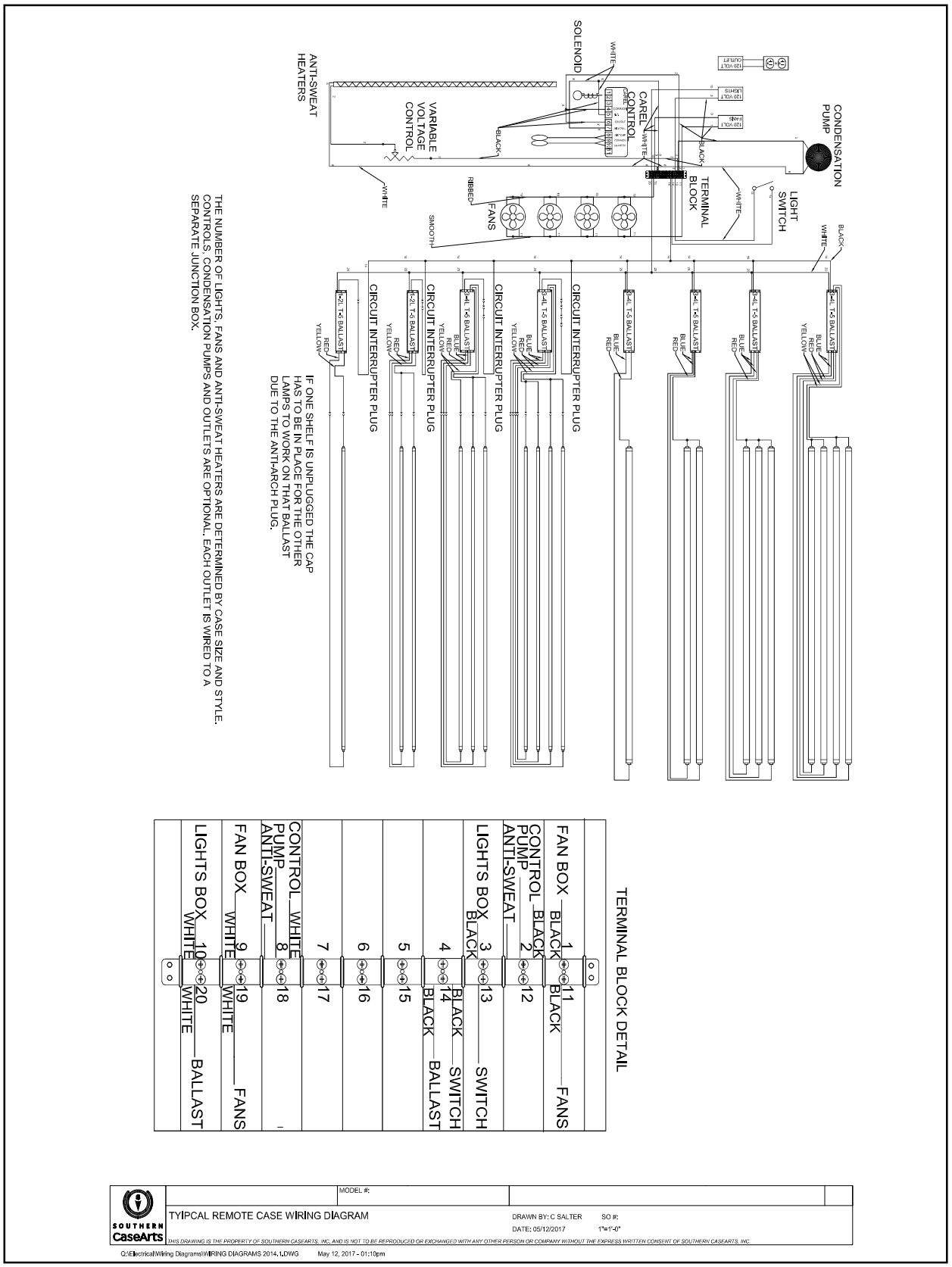

© 2017, Southern CaseArts, Inc. is a Southern Store Fixtures, Inc. company 800.552.6283

Electrical Information

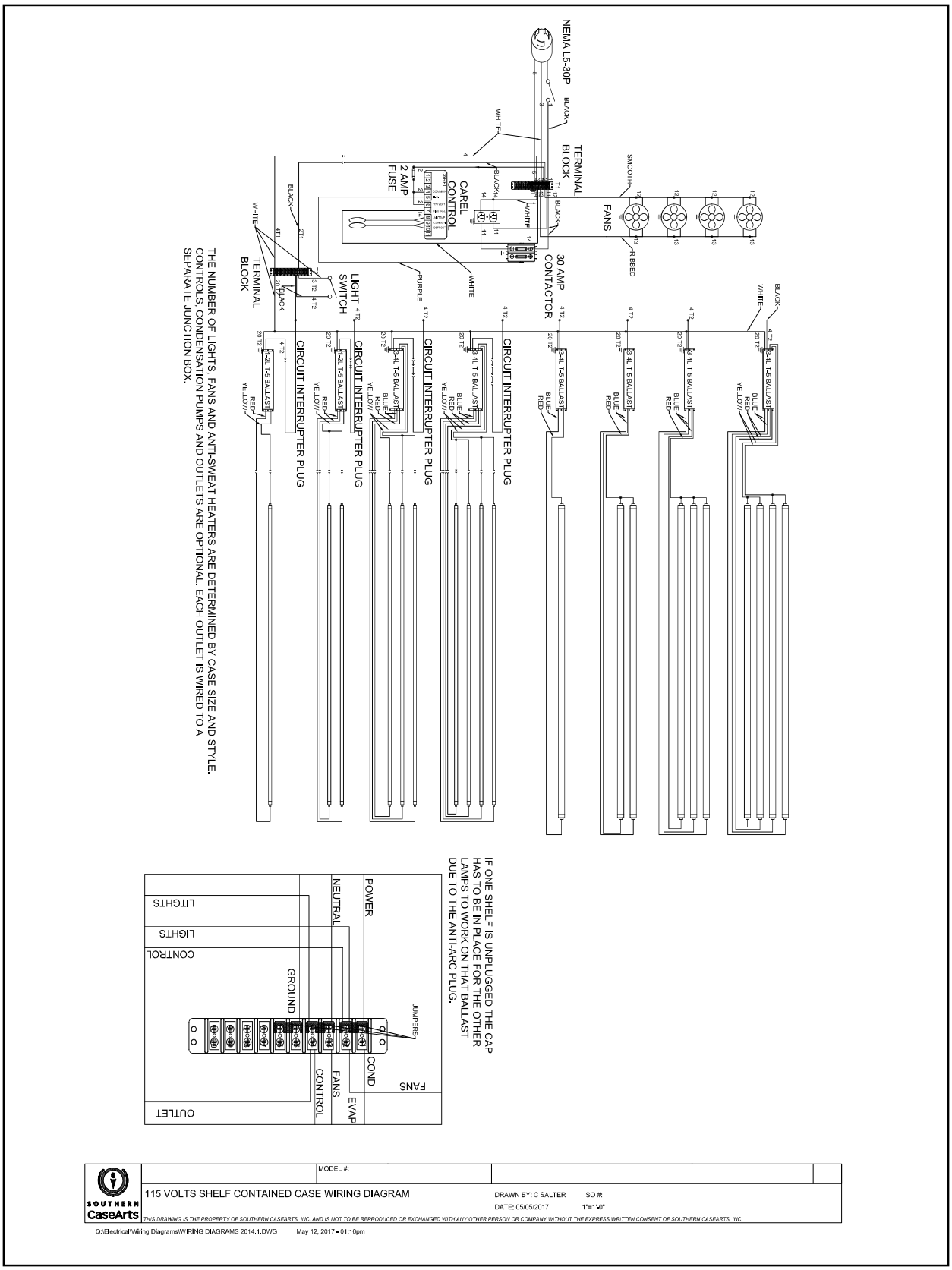

 © 2017 Southern CaseArts, Inc. is a Southern Store Fixtures, Inc. company 800.552.6283

Electrical Information

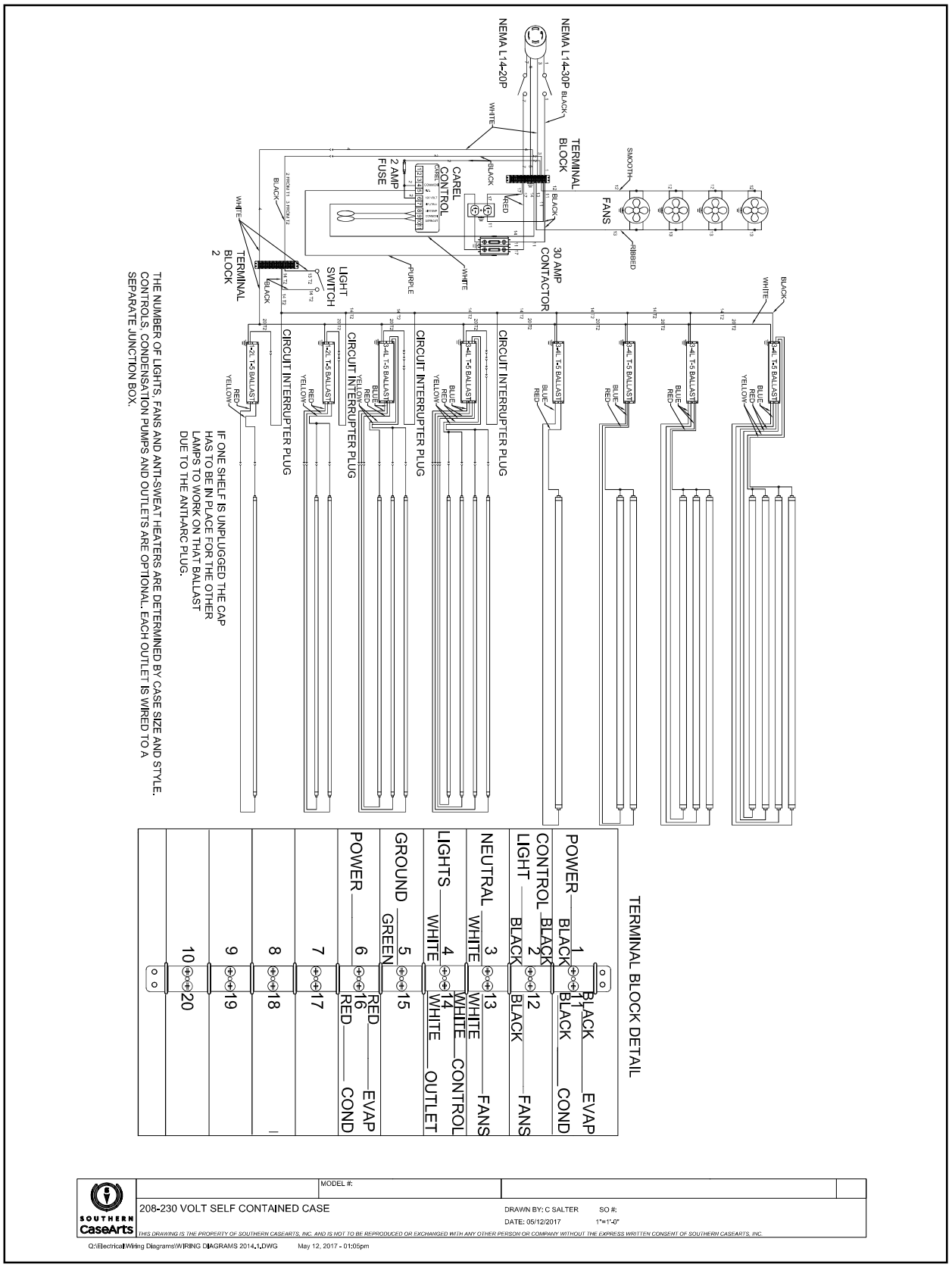

LED Light Fixture Installation

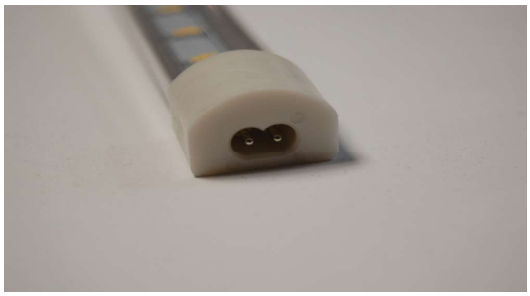

1. Light fixture end cap has curved top and flat bottom to accept wiring harness plug.

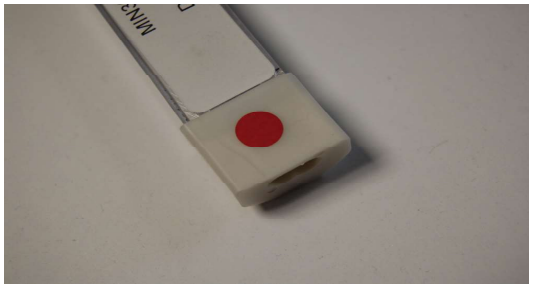

2. Red dot indicates power input this end of light.

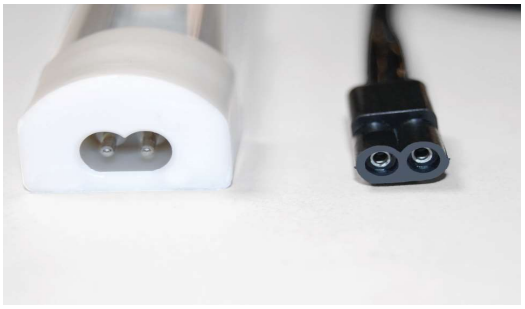

3. Wiring harness has a double curved top and flat bottom which should be aligned to the shape in the receptacle of the fixture when plugged in.

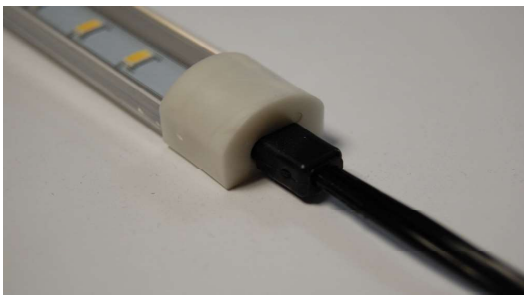

4. Correctly installed wiring harness. Make sure plug is fully seated in end of the light fixture.

5. Light should be snapped into metal clips for attachment to canopy and shelves.

© 2017 Southern CaseArts, Inc. is a Southern Store Fixtures, Inc. company 800.552.6283

This Page Intentionally Left Blank!

Please refer to the refrigeration schedule for settings.

Control Information

PJ Easy / Easy Compact

digital electronic thermostats with defrost controls

1. GENERAL WARNING	1
2. GENERAL DESCRIPTION	1
3. ASSEMBLY AND INSTALLATION	1
3.1 REAR PANEL INSTALLATION AND REMOVAL	1
3.2 FRONT PANEL INSTALLATION AND REMOVAL	1
3.3 WIRING DIAGRAM	2
4. USER INTERFACE AND STARTUP	2
4.1 DISPLAY	2
4.2 KEYPAD FUNCTIONS	2
5. PRELIMINARY CONFIGURATIONS	3
6. NAVIGATING PARAMETERS	3
7. SETTING PARAMETERS	3
8. PROGRAMMING KEY	4

1. General Warning

CAREL bases the development of its products on decades of experience in HVAC, on the continuous investments in technological innovations to products, procedures and strict quality processes with in-circuit and functional testing on 100% of its products, and on the most innovative production technology available on the market. CAREL and its subsidiaries nonetheless cannot guarantee that all the aspects of the product and the software included with the product respond to the requirements of the final application, despite the product being developed according to start-of-the-art techniques. The customer (manufacturer, developer or installer of the final equipment) accepts all liability and risk relating to the configuration of the product in order to reach the expected results in relation to the specific final installation and/or equipment. CAREL may, based on specific agreements, acts as a consultant for the positive commissioning of the final unit/application, however, in no case does it accept liability for the correct operation of the final equipment/system.

Operation of the Carel product is specified in the technical documentation supplied with the product or can be downloaded, even prior to purchase, from the website www.carel.com.
Each CAREL product, in relation to its advanced level of technology, requires setup/configuration/programming/commissioning to be able to operate in the best possible way for the specific application. The failure to complete such operations, which are required/indicated in the user manual, may cause the final product to malfunction; CAREL accepts no liability in such cases.

Only qualified personnel may install or carry out technical service on the product.
The customer must only use the product in the manner described in the documentation relating to the product.

In addition to observing any further warnings described in the manual, the following warnings must be heeded for all CAREL products

- prevent the electronic circuits from getting wet. Rain, humidity and all types of liquids or condensate contain corrosive minerals that may damage the electronic circuits. In any case, the product should be used or stored in environments that comply with the temperature and humidity limits specified in the manual.
- do not install the device in particularly hot environments. Too high temperatures may reduce the life of electronic devices, damage them and deform or melt the plastic parts. In any case, the product should be used or stored in environments that comply with the temperature and humidity limits specified in the manual.
- do not attempt to open the device in any way other than described in the manual.
- do not drop, hit or shake the device, as the internal circuits and mechanisms may be irreparably damaged.
- do not use corrosive chemicals, solvents or aggressive detergents to clean the device.
- do not use the product for applications other than those specified in the technical manual.

All of the above suggestions likewise apply to the controllers, serial boards, programming keys or any other accessory in the CAREL product portfolio.

CAREL adopts a policy of continual development. Consequently, CAREL reserves the right to make changes and improvements to any product described in this document without prior warning.

The technical specifications shown may be changed without prior warning.

The liability of CAREL in relation to its products is specified in the CAREL general contract conditions, available on the website www.carel.com and/or by specific agreements with customers; specifically, to the extent where allowed by applicable legislation, in no case will CAREL, its employees or subsidiaries be liable for any lost earnings or sales, losses of data and information, costs of replacement goods or services, damage to things or people, downtime or any direct, indirect, incidental, actual, punitive, exemplary, special or consequential damage of any kind whatsoever, whether contractual, extra-contractual or due to negligence, or any other liabilities deriving from the installation, use or impossibility to use the product, even if CAREL or its subsidiaries are warned of the possibility of such damage.

2. General Description

easy and easy compact are electronic microprocessor controllers with LED display, developed for the management of refrigerating units, display cabinets and showcases. They exploit the experience and the success of the previous PJ32 range, with the objective of offering a product that is simpler and more economical. The structure of the parameters has been enhanced with new functions for more dynamic and effective management of the temperature control and defrost.

3. Assembly and Installation

3.1 Panel installation using 2 rear brackets (Fig. 3.a)

- insert the instrument in the opening; ①
- secure the instrument by sliding the brackets in the guides on the instrument until compressing them against the panel ②

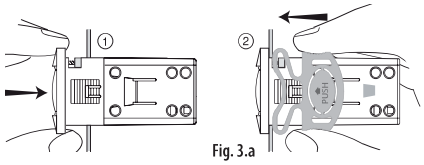

Fig. 3.a

Removing from the panel with brackets

- release the instrument by pressing both brackets where marked "push" and sliding it back on the guides.

3.2 Panel installation from the front using screws (Fig. 3.b)

- the thickness of the fastening panel must not exceed .12 inch;
- remove the front frame and make sure that the two catches are in place (these must not protrude from the outline of the drilling template). If necessary, unscrew the two screws. Do not unscrew excessively, the screws must not be detached from the front panel ①
- insert the instrument in the opening in the panel and hold it in position by the center of the front panel ①
- using the screwdriver, tighten the bottom screw 90°. The catch must come out of its slot and click onto the panel, then tighten until the front panel is secure; Do not over-tighten. When the front panel is secured, simply make another ½ turn to compress the gasket. If the catch does not click onto the panel, unscrew the screw, applying pressure at the same time with the screwdriver so that the catch moves back. Do not unscrew too much, the head of the screw must not be raised from the surface of the front panel ②
- repeat the same operation for the top screw ②
- apply the front frame ③

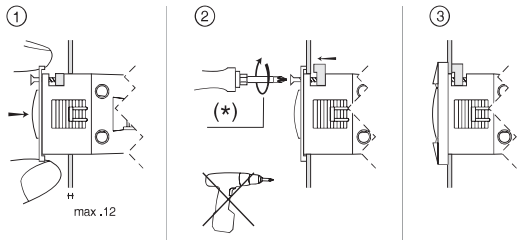

Fig. 3.b

(*) do not over-tighten the screws.

Dismantling using the screws from the front

- unclip the front frame;
- unscrew the bottom screw, at the moment the front panel detaches from the panel, keep pressure on the screw and unscrew a further 90° to make the catch go back into its slot;
- repeat for the top screw;
- remove the instrument from panel, keeping it horizontal

 © 2017 Southern CaseArts, Inc. is a Southern Store Fixtures, Inc. company 800.552.6283

3.3 Wiring Diagram

Easy

PJEZ(S, X)*

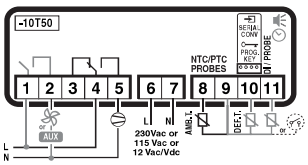

PJEZ(C, Y)*

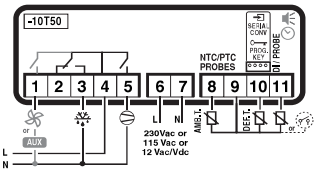

PJEZ(M)*

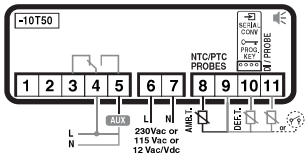

Easy Compact

PJEZS***0**
PJEZS***1**

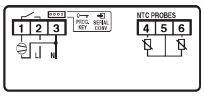

PJEZS***E**

PJEZM*N*0**
PJEZM*N*1**

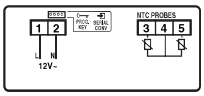

PJEZM*N*E**

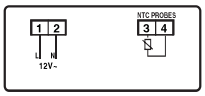

PJEZM*P*0**
PJEZM*P*1**

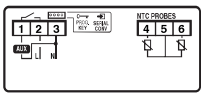

PJEZM*P*E**

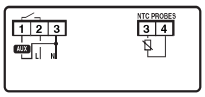

4. User Interface and Startup

4.1 Display

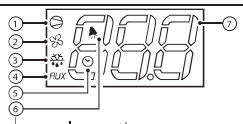

Fig. no.	function	normal operation			start up
		ON	OFF	flash	
1	compressor	on	off	call	ON
2	fan	on	off	call	ON
3	defrost	on	off	call	ON
4	auxiliary output (AUX)	output active	output not active	-	ON
5	clock (RTC)	RTC available, enabled (tEN=1) and at least one time band has been set	RTC not available or not enabled (tEN=0) or no time band set		ON (if the clock is fitted)
6	alarm	alarm in progress	no alarm in progress	-	ON
7	digits	three digits with decimal point and range -199 to 999. See parameters /4, /5, /6 for the type of probe displayed, values in °C/°F and decimal point			

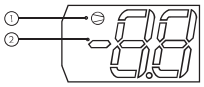

but. no.	function	normal operation			start up
		ON	OFF	flash	
1	compressor	on	off	call	ON
2	digits	two digits with sign and decimal point, -99 to 99(*). See parameters /4, /5, /6 for the type of probe displayed, values in °C/°F and decimal point			

4.2 Keypad Functions

Keypad functions for easy and easy compact models C, S, X, Y

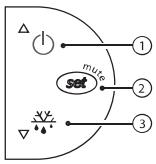

no.	normal operation		start up	
	pressing the button alone	pressing with other buttons		
1	more than 3 s: switch ON/OFF	pressed together with 3 activates /deactivates the continuous cycle	-	
2	- 1 s: displays/sets the set point - more than 3 s: accesses the parameter setting menu (enter password 22) - mutes the audible alarm (buzzer)	-	for 1 s RESET current EZY set	pressed together (2 and 3) activate parameter reset procedure
3	more than 3 s: activates /deactivates the defrost	pressed together with 1 activates /deactivates the continuous cycle	for 1 s displays firmware version	

Keypad functions for easy and easy compact M models (models with keypad only)

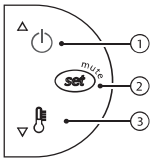

no.	normal operation	start up	
	pressing the button alone		
1	more than 3 s: switch ON/OFF	-	
2	- 1 s: displays/sets the set point - more than 3 s: accesses the parameter setting menu (enter password 22) - mutes the audible alarm (buzzer)	-	pressed together activate parameter reset procedure
3	rapid selection of probe displayed	for 1 s displays firmware version	

© 2017, Southern CaseArts, Inc. is a Southern Store Fixtures, Inc. company 800.552.6283

Control Settings

3.3 Wiring Diagram

Easy

PJEZ(S, X)*

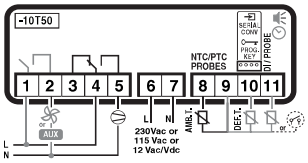

PJEZ(C, Y)*

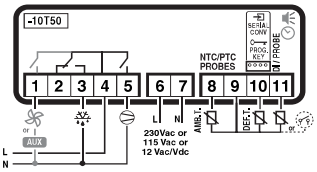

PJEZ(M)*

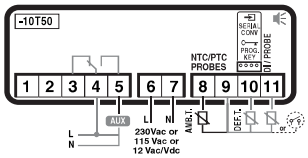

Easy Compact

PJEZS***0**
PJEZS***1**

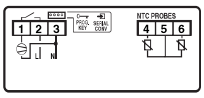

PJEZS***E**

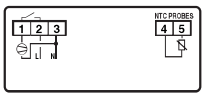

PJEZM*N*0**
PJEZM*N*1**

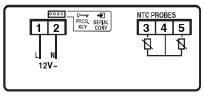

PJEZM*N*E**

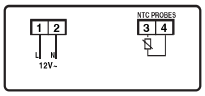

PJEZM*P*0**
PJEZM*P*1**

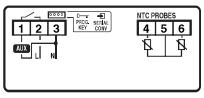

PJEZM*P*E**

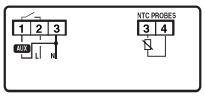

4. User Interface and Startup

4.1 Display

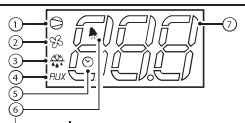

Fig. no.	function	normal operation			start up
		ON	OFF	flash	
1	compressor	on	off	call	ON
2	fan	on	off	call	ON
3	defrost	on	off	call	ON
4	auxiliary output (AUX)	output active	output not active	-	ON
5	clock (RTC)	RTC available, enabled (tEN=1) and at least one time band has been set	RTC not available or not enabled (tEN=0) or no time band set		ON (if the clock is fitted)
6	alarm	alarm in progress	no alarm in progress	-	ON
7	digits	three digits with decimal point and range -199 to 999. See parameters /4, /5, /6 for the type of probe displayed, values in °C/°F and decimal point			

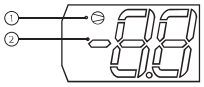

but. no.	function	normal operation			start up
		ON	OFF	flash	
1	compressor	on	off	call	ON
2	digits	two digits with sign and decimal point, -99 to 99(*). See parameters /4, /5, /6 for the type of probe displayed, values in °C/°F and decimal point			

4.2 Keypad Functions

Keypad functions for easy and easy compact models C, S, X, Y

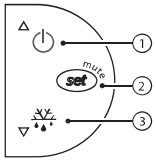

no.	normal operation		start up	
	pressing the button alone	pressing with other buttons		
1	more than 3 s: switch ON/OFF	pressed together with 3 activates /deactivates the continuous cycle	-	
2	- 1 s: displays/sets the set point - more than 3 s: accesses the parameter setting menu (enter password 22) - mutes the audible alarm (buzzer)	-	for 1 s RESET current EZY set	pressed together (2 and 3) activate parameter reset procedure
3	more than 3 s: activates /deactivates the defrost	pressed together with 1 activates /deactivates the continuous cycle	for 1 s displays firmware version	

Keypad functions for easy and easy compact M models (models with keypad only)

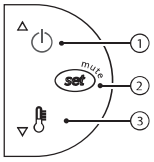

no.	normal operation	start up	
	pressing the button alone		
1	more than 3 s: switch ON/OFF	-	
2	- 1 s: displays/sets the set point - more than 3 s: accesses the parameter setting menu (enter password 22) - mutes the audible alarm (buzzer)	-	pressed together activate parameter reset procedure
3	rapid selection of probe displayed	for 1 s displays firmware version	

© 2017 Southern CaseArts, Inc. is a Southern Store Fixtures, Inc. company 800.552.6283

5. Preliminary Configurations

Once the electrical connections have been completed, simply power-up the controller to make it operative.
CAREL then recommends checking that the display does not show any alarm signals, then set the time and date, and finally set the parameters as desired. The main parameters are as follows:

Control parameters	
st	set point
rd	set point differential
Defrost parameters	
d0	type of defrost
dI	interval between two defrosts
dt	end defrost temperature
dP	maximum defrost duration
Alarm parameters	
Ad	temperature alarm delay
AL	low temperature alarm threshold/deviation
AH	high temperature alarm threshold/deviation

6. Navigating Parameters

The operating parameters, modifiable using the keypad, are divided into two types: frequent (type F) and configuration (type C). Access to the latter is protected by password (default= 22) to prevent accidental or unauthorized modifications.

Accessing the type F parameters:

- press the SET button for more than 3 s (if there are active alarms, mute the buzzer), the display shows the parameter code 'PS' (password);
- use the UP and DOWN buttons to scroll the parameters. The LED corresponding to the category of parameters will be on (see Table 5.b);
- press SET to display the value associated with the parameter
- increase or decrease the value using the UP or DOWN button respectively;
- press SET to temporarily save the new value and display the parameter again;
- repeat the procedure for any other parameters that need to be modified;
- press the SET button for more than 3 s to permanently save the parameters and exit the parameter setting procedure.

Accessing the type C parameters:

- press the SET button for more than 3 s (if there are active alarms, mute the buzzer), the display shows the parameter code "PS" (password);
- press the SET button to access the password setting;
- use the UP and DOWN buttons to scroll the numbers until displaying "22" (password to access the parameters);
- press the SET button to confirm the password;
- use the UP and DOWN buttons to scroll the parameters. The LED corresponding to the category of parameters will be on (see Table 5.b);
- press SET to display the value associated with the parameter
- increase or decrease the value using the UP or DOWN button respectively;
- press SET to temporarily save the new value and display the parameter again;
- repeat the procedure for any other parameters that need to be modified;
- press the SET button for more than 3 s to permanently save the parameters and exit the parameter setting procedure.

Warnings:
If no button is pressed for 60 s, all the changes made to the parameters, temporarily saved in the RAM, will be cancelled and the previous settings restored.

If power is disconnected from the instrument before saving the settings (pressing the SET button for 3 s), all the changes made to the parameters and temporarily saved will be lost.

The dAY, hr, Min parameters are not restored, as these are saved instantly when entered.

Category	Initial	Icon
Probe parameters	/	-
Control parameters	r	-
Compressor parameters	c	
Defrost parameters	d	
Alarm parameters	A	
Fan parameters	F	
AUX output configuration parameters	H1	AUX
RTC parameters	-	

7. Setting Parameters

7.1 Quick Set Parameters

This is a basic list of parameters to quickly start a controller for both medium (table 7.a) and low temperature units (table 7.b).

7.a For medium temperature applications

Parameter	Description	Setting
/5	Select °C / °F	1
St	Set Point	34
rd	Control differential	6
dI	Interval before defrosts	0

7.b For low temperature applications

Parameter	Description	Setting
/5	Select °C / °F	1
St	Set Point	-5
rd	Control differential	6
dI	Interval before defrosts	6
dt	End defrost temperature set point/ defrost temperature threshold with temp. control	45
dp	maximum defrost duration	25

© 2017, Southern CaseArts, Inc. is a Southern Store Fixtures, Inc. company 800.552.6283

Control Settings

Default Settings

CAREL

Par.	Description	Type	Min	Max	UOM.	EZY 0	1	2	3	4
PS	password	F	0	200	-	22				
/2	probe measurement stability	C	1	15	-	8				
/4	select probe displayed	F	1	3	-	1				
/5	select °C/°F	C	0(°C)	1(°F)	-	1				
/6	disable decimal point	C	0	1	-	1				
/7	enable probe 2 alarm (model M only)	C	0	1	0	-				
/C1	probe 1 offset	F	-12.7	+12.7	(°C/°F)	0				
/C2	probe 2 offset	F	-12.7	+12.7	(°C/°F	0				
/C3	probe 3 offset	F	-12.7	+12.7	(°C/°F)	0				
St	set point	S	r1	r2	°C/°F					
r1	minimum set point value	C	-50	r2	°C/°F	20				
r2	maximum set point value	C	r1	+150	°C/°F	60				
r3	select direct/reverse operation	C	0	2	-	0				
r4	night-time set point delta	C	-50	+50	°C/°F	0				
rd	control differential	F	0	+19	°C/°F	4				
c0	compressor and fan start delay on power-up	C	0	100	min	0				
c1	minimum time between consecutive compressor starts	C	0	100	min	0				
c2	minimum compressor off time	C	0	100	min	0				
c3	minimum compressor on time	C	0	100	min	0				
c4	compressor on time with duty setting	C	0	100	min	0				
cc	continuous cycle duration	C	0	15	h	4				
c6	temperature alarm bypass after continuous cycle	C	0	15	h	2				
d0	type of defrost	C	0	4	-	0				
dI	interval between defrosts	F	0	199	h/min (see dC)	4	6	4	3	0
dt	end defrost temperature set point/defrost temperature threshold with temp. control	F	-50	+127	°C/°F	47	47	50	50	0
dP	maximum defrost duration	F	1	199	min/s (see dC)	40				
d4	defrost when switching the instrument on	C	0	1	-	0				
d5	defrost delay on power-up or when enabled by digital input	C	0	199	min	0				
d6	freeze control temperature display during defrost	C	0	1	-	0				
dd	dripping time	F	0	15	min	1				
d8	alarm bypass time after defrost	F	0	15	h	1				
d9	defrost priority over compressor protectors	C	0	1	-	0				
d/	defrost probe reading (2)	F	-	-	°C/°F	-				
dC	time base	C	0	1	-	0				
A0	alarm and fan temperature differential	C	-20	+20	°C/°F	0				
AL	absolute/relative temperature for low temperature alarm	F	-50	150	°C/°F	10				
AH	absolute/relative temperature for high temperature alarm	F	-50	150	°C/°F	60				
Ad	temperature alarm delay	C	0	199	min	30				
A4	3rd input configuration	C	0	11	-	0				
A7	digital input alarm delay	C	0	199	min	0				
A8	enable alarm "Ed" (end defrost by timeout)	C	0	1	-	0				
Ac	set point dirty condenser alarm	C	-50	+150	°C/°F	0				
AE	dirty condenser alarm differential temperature	C	0.1	20.0	°C/°F	0				
Acd	dirty condenser alarm delay	C	0	250	min	0				
H0	serial address	C	0	207	-	1				
H1	AUX output configuration	C	0	3	-	0				
H2	enable keypad	C	0	1	-	1				
H4	disable buzzer	C	0	1	-	0				
H5	ID code (read-only)	F	0	199	-	-				

 © 2017 Southern CaseArts, Inc. is a Southern Store Fixtures, Inc. company 800.552.6283

DIVERSITECH

Condensate Pump

CP-22
CP-22LP
CP-22T
CP-22LPT

Rated Voltage	120 Volts / 60 Hz
Rated Current Draw	1.9 Amps
Head Height	22 ft. maximum
Flow Rate at Zero Head	1.6 GPM

SAFETY WARNING

FOLLOW ALL SAFETY INFORMATION TO REDUCE POTENTIAL ELECTRICAL SHOCK. DISCONNECT POWER BEFORE SERVICING UNIT. PUMP MUST BE PROPERLY GROUNDED.

NEVER USE THE PUMP TO MOVE FLAMMABLE LIQUIDS.

NEVER USE THE PUMP IN AN EXPLOSIVE GAS ENVIRONMENT, OR WHERE GAS FUMES OR VAPOR MAY BE PRESENT.

ALWAYS DISCONNECT THE POWER PRIOR TO MOVING, ADJUSTING OR SERVICING THE PUMP OR ATTACHED SYSTEMS.

Power Source

Supply voltage and frequency must match what is shown on the pump nameplate. Source voltages lower than rated supply can reduce performance and cause the pump to overheat.

Pump Installation

The pump must be level and should be placed on a solid surface or floor. The pump has rubber feet to reduce noise and keep it in place during operation.

Do not use this pump in the presence of spraying or standing water, it may cause a shock. This pump is not suitable for use in Class I or Class II (explosive gas or dust locations).

Do not cover the pump air vents. The pump is air cooled. Do not cover the vent holes located on the top or sides of the pump housing. The pump The pump has a built-in tank that collects the water from the appliance. When the water collected reaches sufficient level inside the pump tank, the pump switches on and pumps the water to a remote location for disposal. When the tank is sufficiently empty the pump automatically switches off.

The pump is capable of lifting water to its rated height and is equipped with a check valve that prevents water from flowing back into the tank when the pump shuts off.

The pump is outfitted with lights that show the status of power available, motor running and high water (alarm) conditions.

The pump is also equipped with a switch that activates when the water in the tank reaches an overflow condition. The overflow safety switch may be connected to turn off the appliance if the high water condition occurs. The switch also has an alarm terminal that may optionally be connected to an audible alarm or remote indicator light to indicate a trouble condition.

© 2017, Southern CaseArts, Inc. is a Southern Store Fixtures, Inc. company 800.552.6283

Optional Equipment

Outlets and Tubing Connections

The pump is equipped with a combination barb-type fitting and check valve. The fitting allows the connection of 3/8" flexible vinyl tubing such as DiversiTech "CVT" clear vinyl. Attach the tubing by pressing it over the barb fitting and secure with a screw type hose clamp.

Route the tubing up and away from the pump; avoid compressing or kinking the tubing. The tube route should be the shortest possible distance from the pump to the building exterior or other drain location. For best results the distance that the water must go UP should be shorter than the distance that it goes DOWN. With the longer DOWN tubing, the length will help siphon the condensate from the tank, speeding the pump out time.

Pump Operation

Apply power by plugging in the pump. Check for green LED indication the power is available. Test float and safety switch by filling the tank or manually operating the float. (see disassembly below)

Test Safety Switch operation (if used) to be sure that the A/C system shuts down and the red ALARM LED lights when the float is raised to the upper part of its travel.

Leak Check: Operate the pump by filling tank to trigger operation. Pump RUN will be indicated by the yellow RUN LED.

WARNING

DISCONNECT POWER BEFORE CLEANING OR SERVICING THIS UNIT! FAILURE TO DO SO COULD RESULT IN SERIOUS INJURY OR DEATH

Pump Maintenance and Disassembly

Always disconnect power before performing maintenance. Pump and deck may be removed from the tank by pushing tabs located on the tank sides away from the deck while lifting on the pump cover.

Periodically inspect the Pump tank to assure it is free of accumulated dirt or sludge. Do not use solvent cleaners. Clean tank with soap and warm water only. The check valve may be removed for cleaning or replacement by unscrewing with a 9/16 wrench. (illustration)

Clean inlet and outlet piping. Tubing may be cleared of slime or debris instantly with a Wagner brand Gallo Gun tool and Swoosh cartridges.

Add Pro-Treat Tabs to the tablet tray.

Reassemble system and check for correct operation.

 © 2017 Southern CaseArts, Inc. is a Southern Store Fixtures, Inc. company 800.552.6283

Air Flow & Product Loading

General Information and Diagram
Cases have been designed with an air delivery system to provide maximum product capacity. It is important that you **DO NOT OVERLOAD THE FOOD PRODUCT DISPLAY** so that it disrupts the air delivery system. Overloading will cause the loss of proper temperature levels and will result in a malfunction of the case, particularly when the discharge and return air sections are covered. Please keep products within the load limits shown on this diagram.

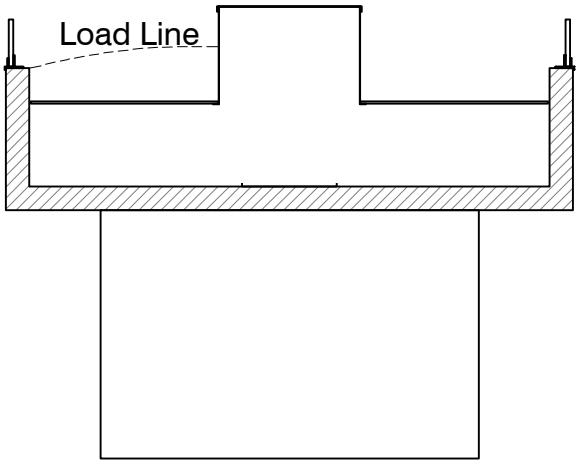

Case Diagram - *Informational*

Shelf Load Limits	
8” Deep	200 lb
10” Deep	200 lb
12” Deep	200 lb
15” Deep	200 lb
18” Deep	200 lb
21” Deep	200 lb

Shelf Load Limits
The weight limits listed here are with the shelf level and the weight evenly distributed. Exceeding these ratings could cause damage and/or bodily harm.

Maintenance & Care Information

General Care and Cleaning

Long life and the satisfactory performance of any equipment is dependent upon the care it receives. To ensure a long life, proper sanitation, and minimum maintenance costs, these cases should be thoroughly cleaned, all debris removed, and the interiors wiped down weekly, at a minimum.

Exterior Surfaces

The exterior surfaces may be cleaned with a mild detergent and warm water to protect and maintain their attractive finish. NEVER USE ABRASIVE CLEANSERS OR SCOURING PADS. We recommend Murphy's Oil Soap used per manufacturer's directions for the cleaning of wood veneer surfaces on refrigerated cases.

Interior Surfaces

The interior surfaces may be cleaned with most domestic detergents, ammonia based cleaners and sanitizing solutions with no harm to the surface.

IMPORTANT

Case Cleaning and Maintenance

- **DO NOT** use abrasive cleansers and scouring pads, as these will mar the finish.
- **DO NOT** use solvent, oil or acidic-based cleaners on any interior surfaces.
- Remove all product and all loose debris to avoid clogging the waste outlet.
- Next, turn off refrigeration, then disconnect electrical power.
- Thoroughly clean all surfaces with soap, hot water and a cleaning cloth or sponge. **DO NOT USE STEAM OR HIGH WATER PRESSURE HOSES TO WASH THE INTERIOR. THESE WILL DESTROY THE CASES' SEALING, CAUSING LEAKS AND POOR PERFORMANCE.**
- Take care to minimize direct contact between fan motors and cleaning or rinse water.
- Rinse with hot water and a cleaning cloth or sponge, but do **NOT** flood.
- **NEVER INTRODUCE WATER TO SELF-CONTAINED CASES, CASES WITH EVAPORATOR PAN OR CONDENSATE PUMP, OR FASTER THAN THE DRAIN OUTLET CAN REMOVE IT.**
- Allow cases to dry before resuming operation. Then power can be restored to case.
- **Do NOT** use hot water on cold glass surfaces. This could cause the glass to shatterand could result in personal injury. Glass fronts and ends should be warm before applying hot water.

Cleaning Honeycomb Assembly

Honeycombs should be cleaned when necessary. Dirty honeycombs will cause merchandisers to perform poorly. The honeycombs may be cleaned with a vacuum cleaner. Soap and water may be used if all water is removed from the honeycomb cells before replacing. Be careful not to damage the honeycombs.

Plexiglass Cleaning

It is very important to utilize only the recommended method and products for cleaning plexiglass. Improper cleaning not only degrades the quality of the surface but also accelerates the frequency of required cleanings. Incorrect cleansers have a tendency of causing small scratches in the surface which, over time, will appear as a haze in the plastic. We recommend using soft cotton cloths.

CAUTION

Fluorescent lamps contain mercury vapor which can be harmful if exposed. Make sure and replace all lamps with the approved shatter shields. Visit http://www.epa.gov/osw/hazard/wastetypes/universal/lamps/index.htm for more info.

 © 2017 Southern CaseArts, Inc. is a Southern Store Fixtures, Inc. company 800.552.6283

Maintenance & Care Information

Cleaning Non-glare Glass

Our non-glare glass receives a special coating on the glass surface. The special coating is applied in a manner to ensure that the high optical clarity of the glass is maintained. To protect this special coating and optical clarity, it is essential that the glass be kept clean. Glass Plus® or Windex® are the only solutions recommended for use on non-glare glass. You should only clean with a micro fiber cleaning cloth. Scotch-Brite and Spontex are two common manufacturers of these cloths. A micro fiber cloth can clean the glass without the use of the solutions. Cleaning solutions should only be used for tough jobs.

- NOTE - Once the glass has been damaged with improper solutions, it is irreparable.
- Special Directions - Certain precautions should be taken before cleaning the inside portion of the lift up glass. We recommend that the glass be fully opened to prevent cleaning solution from splashing onto the food products. While cleaning the cases we recommend that the non-glare glass be fully opened and covered so that no cleaning solution will splash onto the non-glare glass coating.

IMPORTANT

UNDER NO CIRCUMSTANCE should you use coarse paper towels, scouring pads, powders, steel wool, steel fiber materials, blades, acidic detergents, highly alkaline detergents, or fluorine based detergents to clean non-glare glass.

Air Sweep Fan Assembly

The fans are located on the bottom of the tub. These fans must be checked every three months to make sure air can pass through them. If they are clogged remove any dust or debris. If proper air-flow is not maintained then it could cause sweating glass and poor product visibility.

WARNING

Electric dissipater pans are meant solely for the purpose of evaporating condensate water released from the refrigeration coil during the defrost cycle. Dust, food products, grease, caustic liquids, flammable materials, wash water and/or cleaning chemicals should not be allowed to accumulate in the pan. Regular monthly maintenance should be performed to make sure the pan is clean and the float switch moves up and down freely. Failure to follow these guidelines could result in flooding, overheating and/or a fire hazard, and will void the warranty.

To keep your Southern CaseArts case operating at its best we suggest the following maintenance schedule. The yearly service should be performed by a qualified service technician. Before doing monthly or yearly servicing **BE SURE TO DISCONNECT ALL POWER SUPPLIES TO THE CASE!**

The coil cover only lift out for an inspector or trained service provider. May result in damage of the refrigerant system if removed by a untrained person.

WARNING

Disconnect power before cleaning or servicing this unit! Failure to do so could result in serious injury or death

1. The cases should be wiped down daily and cleared of all debris.
2. The product placement within the cases should be checked to ensure proper air flow to all products.
3. Be sure the air return grill is not blocked and the discharge air is at a normal velocity.
4. Be sure the air filter on the condensing unit is not clogged or dirty.

Maintenance & Care Information

MONTHLY cleaning should consist of:

1. The cases should be broken down and cleaned thoroughly.
2. Remove honeycomb holder and wash honeycomb.
3. Wipe fan blades and fan guards.
4. Vacuum tub, fan shrouds (top and bottom), and coils where possible.
5. Remove debris from drain and clean evaporator pan.
6. Take out the air filter for the condensing unit and wash thoroughly and replace.

ANNUAL system check-up and adjustment:

Compressor:

1. Check compressor for indications of flooding. Check and log suction, discharge, and saturated liquid line temperatures.
2. Check temperature differential across liquid line drier.
3. Check operations pressures of refrigeration cycle, verify full sight glass during normal operation.
4. Check unit for excessive noise, vibration, and short cycling.

Electrical:

1. Inspect, clean, and tighten all electrical components.
2. Check and document amp draw for the following:
   A. Compressor.
   B. Line voltage.
   C. Condensing fan motor amperage.
   D. Inspect disconnect and fuses.
3. Check contactor for signs of burnt contacts.

WARNING

After cleaning or maintenance all lighting and fan (electrical connections) must be dried and fully seated to avoid arcing or possible fire or safety hazards.

Condenser and evaporator fan motors:

1. Check for proper rotation and operation.
2. Check fan blades for damage.
3. Check motor mounts for damage.
4. Clean all dirt and debris from fan blades.
5. Check for proper operation during both refrigeration and defrost.
6. Check bearing for vibration and noise.
7. Check fan motors for abnormal vibration and noise.

WARNING

When working in a case where the coil cover is removed, use extreme caution. The coil contains many sharp edges that can cut your hand or arm.

General:

1. Perform coil cleaning on evaporator and condenser coils.
2. Remove and clean honeycomb diffusers.
3. Check and adjust controls, defrost time clocks, and thermostats.
4. Check superheat and adjust to proper setting if necessary.
5. Check for refrigeration leaks on all equipment. Leak check inside the cabinet.
6. Inspect and check operation of all safety controls.
7. Make sure all panels are secure and secure with screws where necessary.
8. Check and clean condensate drain lines and pans.
9. Check drain for proper trap installation and that trap is holding water.
10. Check for proper draining. Verify that all debris is clear and drain is working properly.
11. Check condensate pump for proper operation and clean by flushing with bleach.
12. Check for proper temperatures on all levels and sections of case, log temperatures.
13. Blow out dust from screens in plenums.

 © 2017 Southern CaseArts, Inc. is a Southern Store Fixtures, Inc. company 800.552.6283

Trouble Shooting Remote Cases

Trouble Shooting Remote Cases

We have prepared a listing of potential case problems and how to diagnose performance issues.

1. Is the expansion valve superheat set correctly at 5° - 7° Fahrenheit?
2. Is the product at proper temperature when it is received from the cooler for merchandising? These cases are designed to maintain safe temperature once the product is placed in the case. However, the cases are not designed to cool down the products from unsafe temperatures.
3. Always allow the cases to operate for a minimum of four hours before loading with product.
4. Regarding the actual merchandising of the products in the case:
   A. Is the product or case decoration obstructing the air discharge or return air?
   B. Is the product exceeding the load limit of the case?
   C. Good judgement should be utilized concerning rotation of product.
   D. On most cases (other than multi-level service cases) the load line or refrigerated zone can be determined by drawing a line from the rear of the discharge air grill to the return air intake. Everything under this line is considered within the refrigerated zone.
5. All deck pans should be seated properly in the base of the case with all fan plenums securely in place. All fans must be operational.
6. For self-service open case merchandising please consider the following:
   A. Air conditioning ducts blowing directly into an open case will impair the performance. Any air current from prep areas or ceiling fans can also impair the performance of the cases.
   B. Spotlights, ovens, or forced air heat systems placed near the cases can affect the case air curtain and the temperature performance of the case.
7. **Do NOT walk on top of the case.**
8. Remote system problems that potentially impair case performance:
   A. Evaporator temperatures should be maintained at settings specified for each case in our technical manual.
   B. Variations in liquid temperature affect the expansion valve performance. Are all of the sub-cooled liquids maintained at a constant temperature?
   C. Does the system have enough refrigerant to maintain all of the remote case applications?
   D. It is essential that the specified defrost requirement for each case is followed to ensure product integrity while at the same time defrosting the case efficiently.
   E. It is recommended that liquid and suction lines are sized correctly for each case lineup.
   F. If other cases are connected in combination, this could affect suction pressure.
   G. EPR's at the case or at the system must be set to maintain the proper evaporator temperatures. Case temperatures are to be controlled by the factory T-stat or suction solenoid.

CAUTION

Do NOT walk on top of the case. These cases are not designed or built in standard models to support extra weight on top. Heavy weight placed on top of the case may cause damage to the case as well as personal injury.

Trouble Shooting Self-Contained Cases

Trouble Shooting Self-Contained Refrigerated Cases

PROBLEM: WILL NOT HOLD TEMPERATURE

- Check the electronic thermostat setting.
- Is the air filter clogged or dirty?
- Are any air conditioner vents blowing into or toward the case? Are any spotlights shining into the case?
- Is the case near a door?
- Is the case in direct sunlight?
- Is there cooking equipment or hood vent causing air currents?
- Is the ambient air above 75° F or 55% relative humidity?
- Is the condensing coil clean?
- Is the evaporator coil clean?
- Are the discharge or return air vents blocked?

PROBLEM: CASE LEAKS WATER ON FLOOR

- Is the ambient air above 55% relative humidity?
- Is case drain clogged?
- Is evaporator pan (or condensate pump) overflowing?
- The electric dissipater pan cannot handle being flushed with water from cleaning.
- Cases equipped with electric dissipater pans should **never** have food products washed or poured into the drain as it will result in damage to the heating element.
- Make sure all case joints and penetrations are sealed.

PROBLEM: CASE SWEATING

- Is the relative humidity above 55% and 75° F?
- Is the case near an open door or window?
- Is the air sweep working?

FOR SERVICE, PARTS AND WARRANTY INFORMATION CALL 800-552-6283
(Please have model and serial numbers ready. This information can be found on the name plate of the case.)

 © 2017 Southern CaseArts, Inc. is a Southern Store Fixtures, Inc. company 800.552.6283

PARTS LEGEND

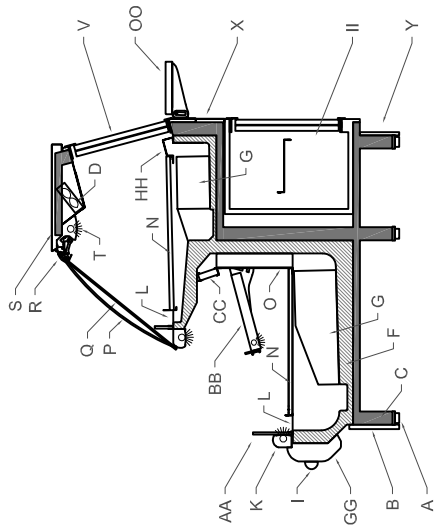

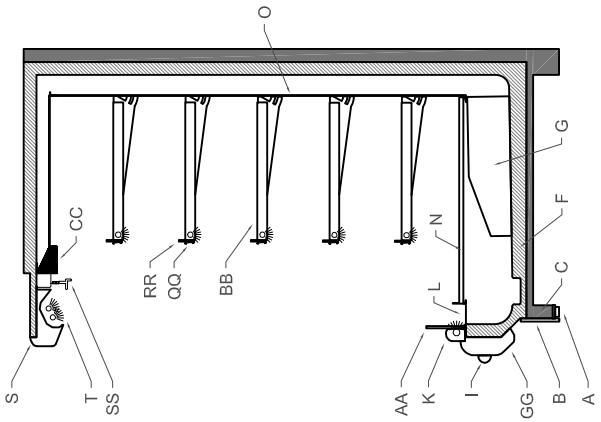

KK - End Glass
LL - Food Shield
MM - Canopy Support
NN - Customer Ledge
OO - Flip-up Rear Ledge
PP - Perimeter Air Discharge
QQ - Tag Mold
RR - Product Stop
SS - Night Curtain

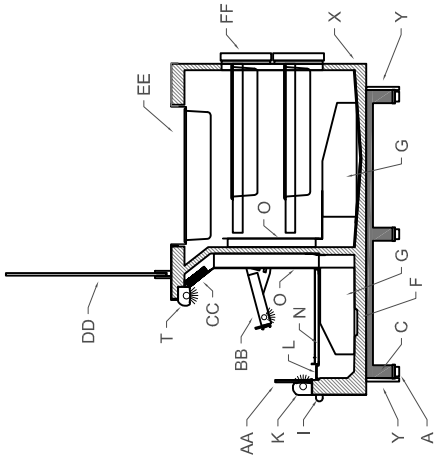

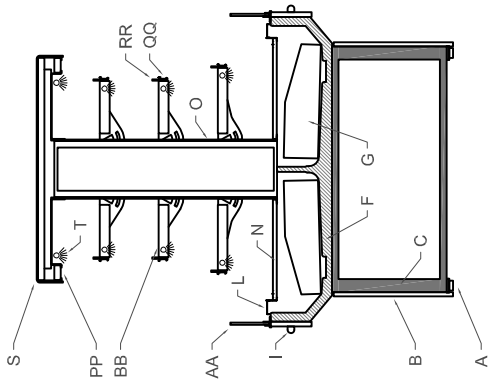

M - Internal Air Dam
N - Deck Pan
O - Plenum
P - Curved Front Glass
Q - Flat Front Glass
R - Lift Glass Hardware
S - Top Ledge
T - Canopy Light
U - Strut
V - Rear Doors
W - Rear Ledge
X - Exterior Case Back

Y - Kickplate
Z - Mezzanine Shelf
AA - Air Dam
BB - Adjustable Shelf
CC - Honey Comb
DD - Vertical Food Shield
EE - Refrigerated Pan Rail
FF - Pull-out Rear Refrigerated Drawers
GG - "Classic" Architectural Aluminum Nosing
HH - Discharge Air Grill
II - Open / Closed, Refrigerated / Dry Rear Storage
JJ - Case Facade

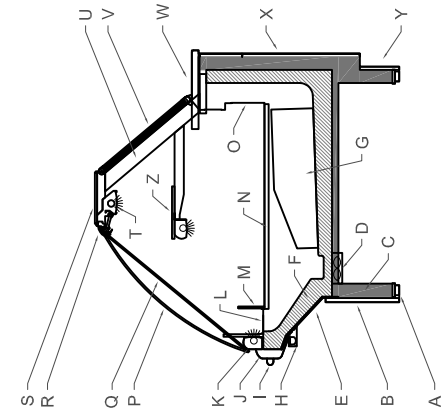

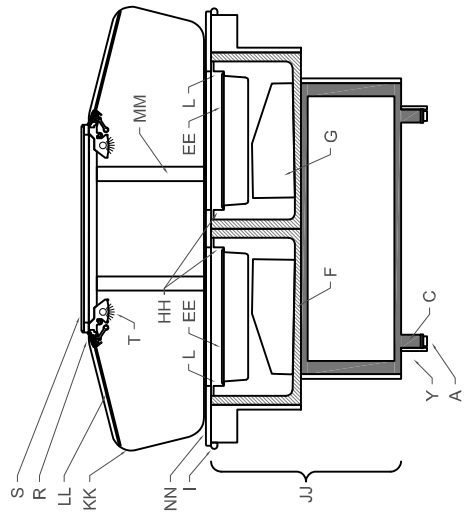

A - NSF Leveler Leg
B - Front Panel
C - Structural Frame
D - Front Glass Air Sweep
E - Basin Cover
F - Basin
G - Coil / Fan Shroud
H - Down Light
I - Bumper Mold
J - "Stealth" Architectural Aluminum Nosing
K - Front Deck Light
L - Return Air Grill

© 2017, Southern CaseArts, Inc. is a Southern Store Fixtures, Inc. company 800.552.6283

MAINTENANCE SCHEDULE
MONTHLY

PERFORMED BY	COMPANY	DATE	NOTES

SEE UNDER MAINTENANCE AND CARE INFORMATION IN THIS MANUAL FOR MAINTENANCE CHECK LIST

 © 2017 Southern CaseArts, Inc. is a Southern Store Fixtures, Inc. company 800.552.6283

MAINTENANCE SCHEDULE
MONTHLY

PERFORMED BY	COMPANY	DATE	NOTES

MAINTENANCE SCHEDULE
ANNUALLY

PERFORMED BY	COMPANY	DATE	NOTES

SEE UNDER MAINTENANCE AND CARE INFORMATION IN THIS MANUAL FOR MAINTENANCE CHECK LIST

© 2017, Southern CaseArts, Inc. is a Southern Store Fixtures, Inc. company 800.552.6283

Warranty & Compliance

Limited Warranty

TWELVE MONTH WARRANTY - SOUTHERN CASEARTS, INC.'S PRODUCTS ARE WARRANTED TO BE FREE FROM DEFECTS IN MATERIAL AND WORKMANSHIP UNDER NORMAL USE AND MAINTENANCE FOR A PERIOD OF TWELVE MONTHS FROM THE DATE OF ORIGINAL SHIPMENT. A NEW OR REBUILT PART TO REPLACE ANY DEFECTIVE PART WILL BE PROVIDED WITHOUT CHARGE, PROVIDED THE DEFECTIVE PART IS RETURNED TO SOUTHERN CASEARTS, INC. THE REPLACEMENT PART ASSUMES THE UNUSED PORTION OF THE WARRANTY.

This warranty does not include labor or other costs incurred for repairing, removing, installing, shipping, servicing, or handling of either defective parts or replacement parts.

The twelve month warranty shall not apply to any of the following:

1. To any product or any part thereof which has been subject to accident, alteration, negligence, misuse or abuse, operation on improper voltage, or which has not been operated or maintained in accordance with the Southern CaseArts, Inc.'s recommendations, or if the serial number of the unit has been altered, defaced, or removed.
2. When the product, or any part thereof, is damaged by fire, flood, or other act of God.
3. Outside the continental United States.
4. To labor cost for replacement of parts, or for freight, shipping expenses, sales tax or upgrading.
5. When the operation is impaired due to improper installation.

THIS PLAN DOES NOT COVER CONSEQUENTIAL DAMAGES. Southern CaseArts, Inc. shall not be liable under any circumstances for any consequential damages of any kind, including without limitation, loss of profit, use or revenue or additional labor cost, loss of refrigerant or food products, or injury to person(s) or property caused by or resulting from any defective products, material or parts, or for any delay in its performance hereunder due to causes beyond its control.

This warranty is expressly in lieu of all other warranties, express or implied and all other obligations or liabilities on Southern CaseArts, Inc.'s part. The obligation to repair or replace parts or components determined to be defective in material or workmanship shall be Southern CaseArts, Inc.'s only and entire liability whether based on tort, contract, warranty or any other theory. Southern CaseArts, Inc. neither assumes nor authorizes any other person or entity to assume for it any other liability in connection with any product(s). The foregoing shall constitute the sole and exclusive liability of Southern CaseArts, Inc.

Customer's acceptance and/or use of any Southern CaseArts, Inc. product(s) constitutes customer's acceptance of and agreement with all terms and provisions of this limited warranty.

MAIL CLAIM TO:
SOUTHERN CASEARTS, INC.
275 DREXEL ROAD S.E.
BESSEMER, AL. 35022

© 2017 Southern CaseArts, Inc. is a Southern Store Fixtures, Inc. company 800.552.6283

Liabilty Notice

Shelf Lighting System

Southern CaseArts, Inc will not be liable for any direct or indirect exposure to water or other liquids on the shelf lighting system. The use of a water hose or misting system on a display case with shelf lighting can lead to a number of serious issues.This could cause electrical failures, electric shock, fire, and mold, which could lead to injury, death, sickness, and property damage. **Do not use water hoses, misting systems, or any device that sprays liquid**, **on a display case with lighted shelves.** The lighting on the case is not designed to be exposed to water or other liquids. If a water hose or misting system is used or installed, Southern CaseArts will not be subject to any liabilities or obligations. Any personal injury, death, or property damage resulting from an electrical failure, fire, electric shock, or mold. Southern CaseArts shall not be subject to any obligation or liabilities from the above notice.

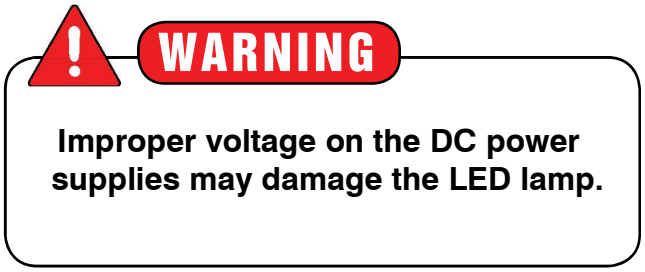

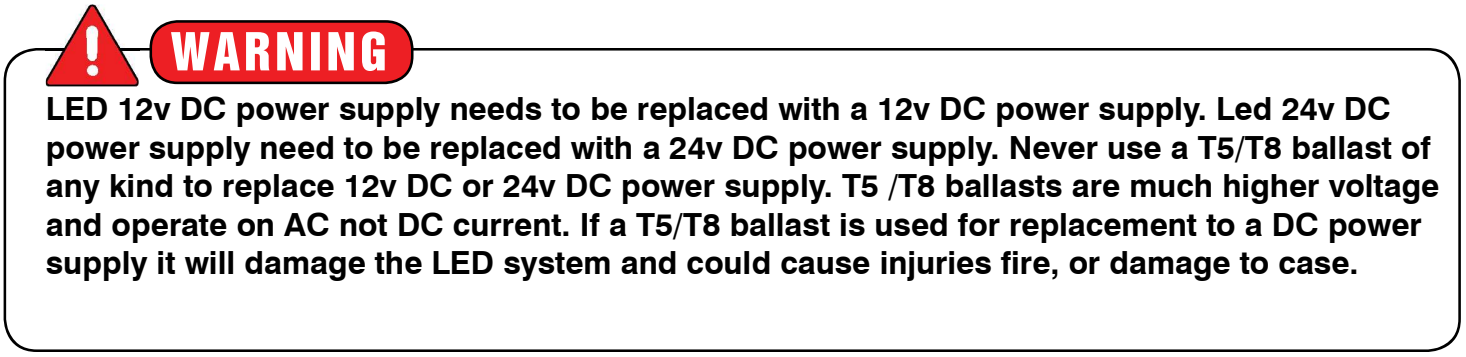

SOUTHERN
CaseArts

275 Drexel Road S.E.
Bessemer, AL 35022

Phone: 800.552.6283
Fax: 205.428.2552

ur Exclusive Source for Innovative Food Displays

Installation, Maintenance, & Operation Guide

P/N: LD-MN-0040-0113

© 2017, Southern CaseArts, Inc. is a Southern Store Fixtures, Inc. company 800.552.6283