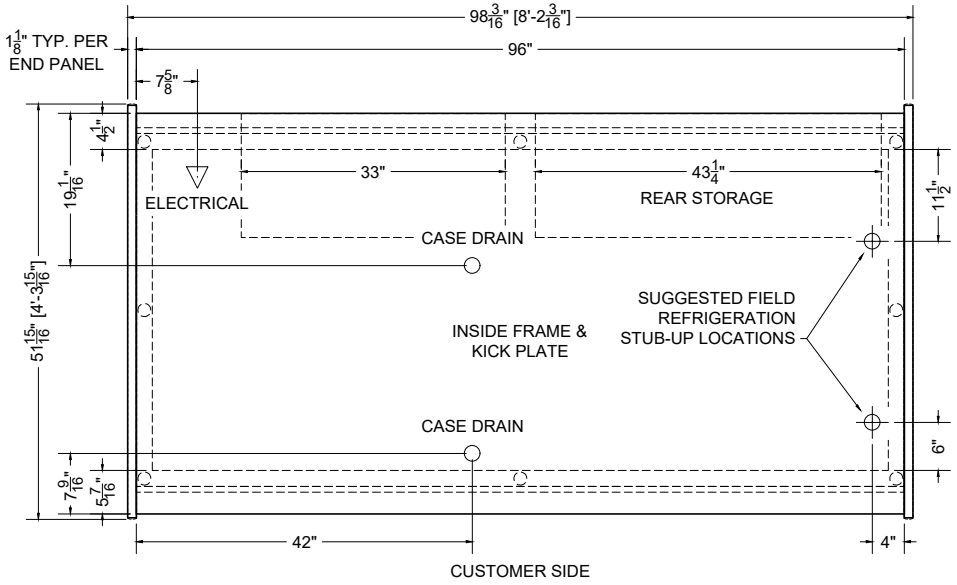

PLAN MECHANICAL VIEW

08.0-CVT-BWD-R *CHESTNUT*

QTY	DESCRIPTION	PART NUMBER	VOLTAGE	PHASE	AMPS	TOTAL AMPS
8	45" LED 3500K, FROSTED, 24V	LG-FX-XXX-X	115V	1	0.09	0.72
4	EVAPORATOR FAN	RF-FA-XXXX	115V	1	0.17	0.68
5	EVAPORATOR FAN	AFXXX	115V	1	0.24	1.20
2	AIR SWEEP FAN	AFXXX	115V	1	0.24	0.48

CIRCUIT#1 (LIGHTS)	TOTAL AMPS:0.72	VOLTAGE:115/1/60	CONNECTION:HARDWIRED
CIRCUIT#2 (FANS)	TOTAL AMPS:2.36	VOLTAGE:115/1/60	CONNECTION:HARDWIRED
CIRCUIT#3 (CONV. OUTLET)	TOTAL AMPS:20.00	VOLTAGE:115/1/60	CONNECTION:HARDWIRED
CIRCUIT#4 (ISO. OUTLET)	TOTAL AMPS:20.00	VOLTAGE:115/1/60	CONNECTION:HARDWIRED
MODEL:CVT-BWD (DOME)	APPLICATION: DELI	BTUH:2800	EVAP TEMP: 22°F
DEFROST:TIME-OFF, 4/40MIN, 47° TEMP TERMINATION			
MODEL:CVT-BWD (BASE)	APPLICATION: DELI	BTUH:4000	EVAP TEMP: 24°F
DEFROST:TIME-OFF, 4/40MIN, 47° TEMP TERMINATION			

* OPTIONAL COMPONENT LOAD INCLUDED

TOP PACKOUT VOLUME: 16.41 CUBIC FT.
BOTTOM PACKOUT VOLUME: 9.56 CUBIC FT.
TOP INTERNAL VOLUME: 25.26 CUBIC FT.
BOTTOM INTERNAL VOLUME: 14.42 CUBIC FT.
REAR STORAGE: 9.81 CUBIC FT.

CONFORMS TO UL STD 471.
CONFORMS TO NSF STD 7.
CERTIFIED TO CAN/CSA STD C22.2 NO. 120.

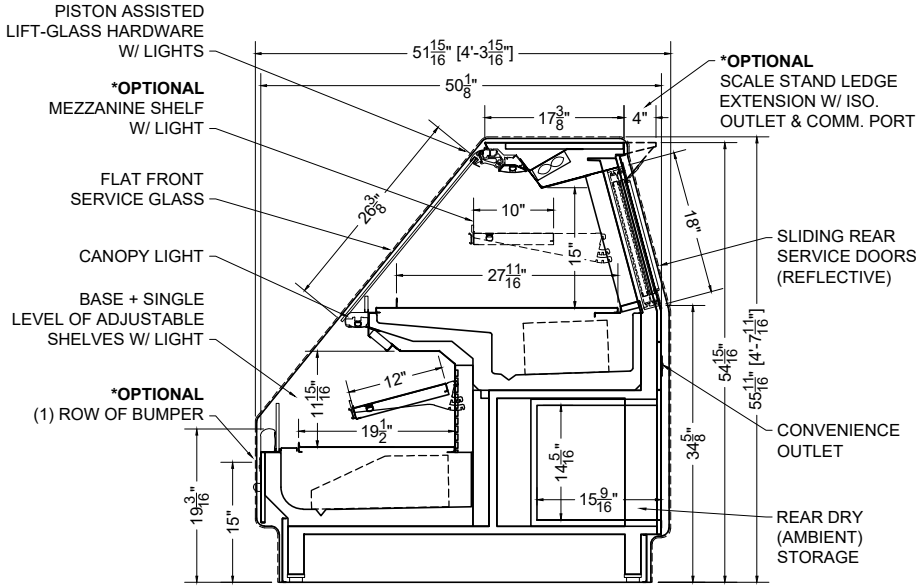

SECTION VIEW

Proj SPECIFICATION SHEET Desc 08.0-CVT-BWD-R Deli Combination Case Name AME Dwg# 038521 Rev #01- 09/10/24

CONFIDENTIAL DOCUMENT: THIS DRAWING IS CONFIDENTIAL AND THE PROPERTY OF SOUTHERN CASEARTS, INC AND IS NOT TO BE REPRODUCED OR EXCHANGED WITH ANY OTHER PERSON OR COMPANY WITHOUT THE EXPRESS WRITTEN CONSENT OF SOUTHERN CASEARTS, INC.
COPYRIGHT ©2024 SOUTHERN CASEARTS, INC. ALL RIGHTS RESERVED

H:\Design\001 Product Line Documents\Prior To 2021\400 - Combination\CVT\BWD, BWDC\CAD\CVT-BWD, BWDC.dwg

1/2" = 1'

DRAWING DETAILS SUBJECT TO CHANGE DURING THE ENGINEERING PROCESS

SOUTHERN CaseArts