SOUTHERN CaseArts
A Royston Group Company

Project Name _____
Model # _____ Qty _____ Item # _____
Approval _____ AIA# _____ SIS# _____

Placid
Multideck Island Merchandiser | Cold
MDI-3N, MDI-3M, MDI-3S, MDI-4M



southerncasearts.com | 800.552.6283



OVERVIEW

The **Placid Multideck Island Refrigerated Merchandiser** is the perfect addition to your store for grab-n-go items, meats, cheese, snacks and beverages. Available in multiple lengths with adjustable shelves which provide versatility for products and packout.

STANDARD FEATURES

- **Nominal Length:** 3.5', 3.6', 4.5', 4.6', 5.5', 5.6', 5.9', 6.2', 7.9', 11.2' 13.0'
- **Shelves:** Adjustable shelves (# varies by model)
- **Interior Lighting:** LED
- **Exterior:** Black powder coat

PRODUCT CATEGORIES

Meat | Cheese/ Dairy | Snacks/ Sandwiches | Chilled Beverages | Prepared Food

03.5-MDI-3N1F-R | Placid Multideck Island Merchandiser

QTY	DESCRIPTION	PART NUMBER	VOLTAGE	PHASE	AMPS	TOTAL AMPS
4	12" LED 3500K, FROSTED, 24V	LG-FX-XXX-X	115V	1	0.02	0.08
6	23" LED 3500K, FROSTED, 24V	LG-FX-XXX-X	115V	1	0.04	0.24
6	EVAPORATOR FAN	AFXXX	115V	1	0.24	1.44

CIRCUIT#1 (LIGHTS) **TOTAL AMPS:** 0.32 **VOLTAGE:**115/1/60 **CONNECTION:** HARDWIRED
CIRCUIT#1 (FANS) **TOTAL AMPS:** 1.44 **VOLTAGE:**115/1/60 **CONNECTION:** HARDWIRED
MODEL: MDI-3N **APPLICATION:** DELI **BTUH:** 5000 **EVAP TEMP:** 20°F
DEFROST: TIME-OFF, 4/40 MIN, 47° TEMP TERMINATION
SHIPPING DIMENSIONS: 56" X 48" X 72" **PACKOUT VOLUME:** 12.54 CUBIC FT.
WEIGHT: 610 LBS. **INTERNAL VOLUME:** 17.75 CUBIC FT.

© 2025 Southern CaseArts. All rights reserved. Information and specifications subject to change without notice.
All values are design or typical values when measured under laboratory conditions.

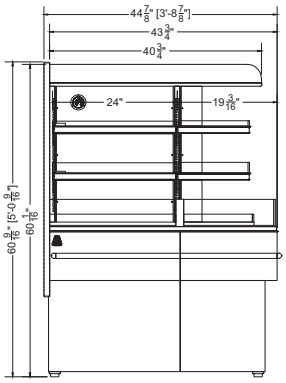

Side View - 03.5-F-R

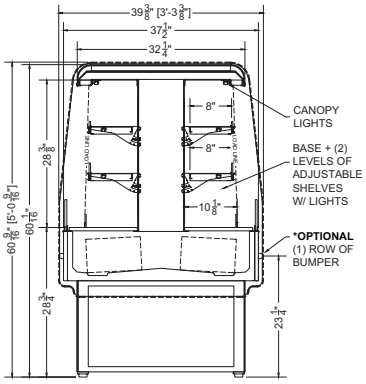

Section View - 03.5-F-R

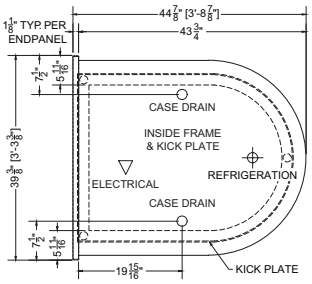

Plan Mechanical View - 03.5-F-R

04.5-MDI-3N1F-R | Placid Multideck Island Merchandiser

QTY	DESCRIPTION	PART NUMBER	VOLTAGE	PHASE	AMPS	TOTAL AMPS
4	12” LED 3500K, FROSTED, 24V	LG-FX-XXX-X	115V	1	0.02	0.08
6	34” LED 3500K, FROSTED, 24V	LG-FX-XXX-X	115V	1	0.07	0.42
6	EVAPORATOR FAN	AFXXX	115V	1	0.24	1.44

CIRCUIT#1 (LIGHTS) **TOTAL AMPS:** 0.50 **VOLTAGE:**115/1/60 **CONNECTION:** HARDWIRED
CIRCUIT#1 (FANS) **TOTAL AMPS:** 1.44 **VOLTAGE:**115/1/60 **CONNECTION:** HARDWIRED
MODEL: MDI-3N **APPLICATION:** DELI **BTUH:** 6200 **EVAP TEMP:** 20°F
DEFROST: TIME-OFF, 4/40 MIN, 47° TEMP TERMINATION
SHIPPING DIMENSIONS: 68” X 48” X 72” **PACKOUT VOLUME:** 16.42 CUBIC FT.
WEIGHT: 720 LBS. **INTERNAL VOLUME:** 22.82 CUBIC FT.

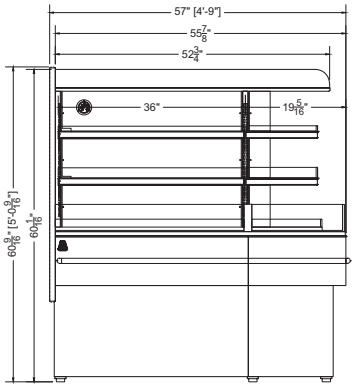

Side View - 04.5-F-R

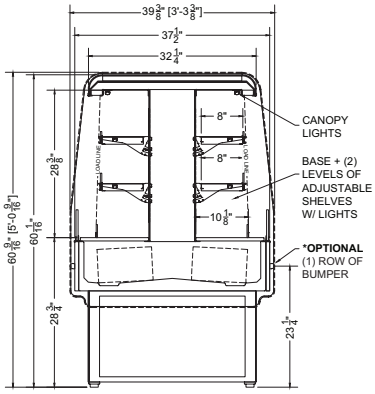

Section View - 04.5-F-R

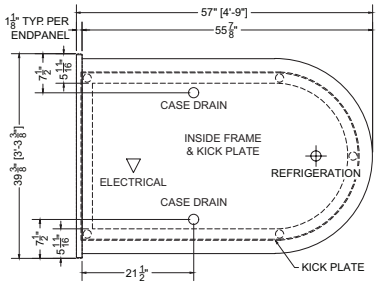

Plan Mechanical View - 04.5-F-R

05.5-MDI-3N1F-R | Placid Multideck Island Merchandiser

QTY	DESCRIPTION	PART NUMBER	VOLTAGE	PHASE	AMPS	TOTAL AMPS
4	12” LED 3500K, FROSTED, 24V	LG-FX-XXX-X	115V	1	0.02	0.08
6	45” LED 3500K, FROSTED, 24V	LG-FX-XXX-X	115V	1	0.09	0.54
8	EVAPORATOR FAN	AFXXX	115V	1	0.24	1.92

CIRCUIT#1 (LIGHTS) **TOTAL AMPS:** 0.62 **VOLTAGE:**115/1/60 **CONNECTION:** HARDWIRED
CIRCUIT#1 (FANS) **TOTAL AMPS:** 1.92 **VOLTAGE:**115/1/60 **CONNECTION:** HARDWIRED
MODEL: MDI-3N **APPLICATION:** DELI **BTUH:** 7950 **EVAP TEMP:** 20°F
DEFROST: TIME-OFF, 4/40 MIN, 47° TEMP TERMINATION
SHIPPING DIMENSIONS: 80” X 48” X 72” **PACKOUT VOLUME:** 20.29 CUBIC FT.
WEIGHT: 850 LBS. **INTERNAL VOLUME:** 27.89 CUBIC FT.

© 2025 Southern CaseArts. All rights reserved. Information and specifications subject to change without notice.
All values are design or typical values when measured under laboratory conditions.

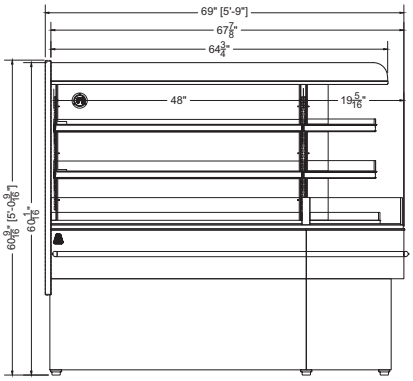

Side View - 05.5-F-R

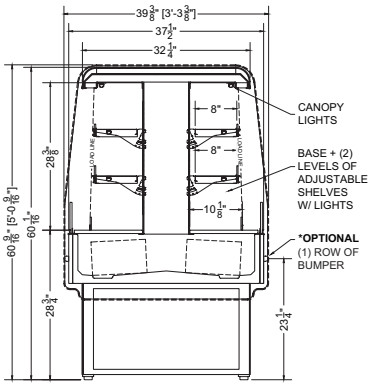

Section View - 05.5-F-R

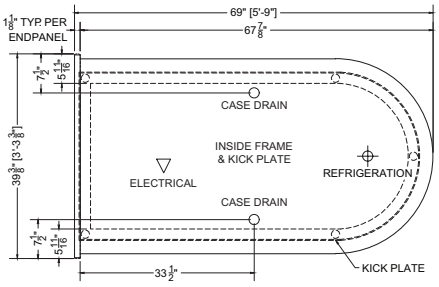

Plan Mechanical View - 05.5-F-R

03.5-MDI-3N1F-S | Placid Multideck Island Merchandiser

QTY	DESCRIPTION	PART NUMBER	VOLTAGE	PHASE	AMPS	TOTAL AMPS
4	12" LED 3500K, FROSTED, 24V	LG-FX-XXX-X	115V	1	0.02	0.08
6	23" LED 3500K, FROSTED, 24V	LG-FX-XXX-X	115V	1	0.04	0.24
6	EVAPORATOR FAN	AFXXX	115V	1	0.24	1.44
1	CONDENSING UNIT	RF-CU-0388-A	208/230V	1	9.80	9.80
1	CONDENSATE EVAP PAN / 1500W / HALF	EL-EV-XXXX	208V	1	7.21	7.21

CIRCUIT#1 **TOTAL AMPS:** 18.77 **VOLTAGE:**208-230/1/60, 3-WIRE **CONNECTION:** L14-30P
SHIPPING DIMENSIONS: 56" X 48" X 72" **PACKOUT VOLUME:** 12.54 CUBIC FT.
WEIGHT: 710 LBS. **INTERNAL VOLUME:** 17.75 CUBIC FT.

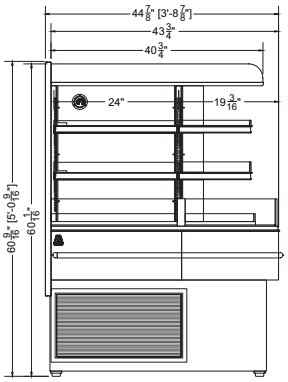

Side View - 03.5-F-S

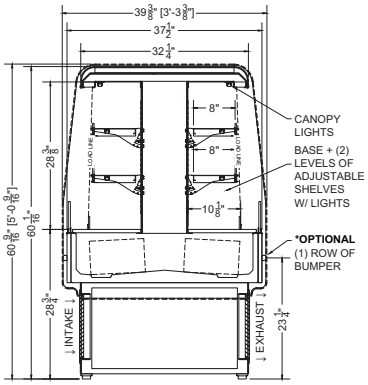

Section View - 03.5-F-S

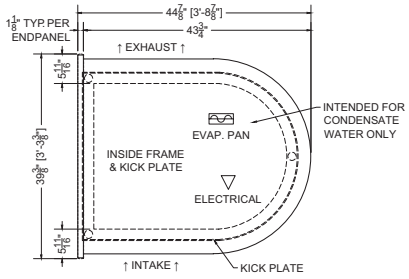

Plan Mechanical View - 03.5-F-S

04.5-MDI-3N1F-S | Placid Multideck Island Merchandiser

QTY	DESCRIPTION	PART NUMBER	VOLTAGE	PHASE	AMPS	TOTAL AMPS
4	12" LED 3500K, FROSTED, 24V	LG-FX-XXX-X	115V	1	0.02	0.08
6	34" LED 3500K, FROSTED, 24V	LG-FX-XXX-X	115V	1	0.07	0.42
6	EVAPORATOR FAN	AFXXX	115V	1	0.24	1.44
1	CONDENSING UNIT	RF-CU-0388-A	208/230V	1	9.80	9.80
1	CONDENSATE EVAP PAN / 1500W / FULL	EL-EV-XXXX	208V	1	7.21	7.21

CIRCUIT#1 **TOTAL AMPS:** 18.95 **VOLTAGE:**208-230/1/60, 3-WIRE **CONNECTION:** L14-30P
SHIPPING DIMENSIONS: 68" X 48" X 72" **PACKOUT VOLUME:** 16.42 CUBIC FT.
WEIGHT: 820 LBS. **INTERNAL VOLUME:** 22.82 CUBIC FT.

© 2025 Southern CaseArts. All rights reserved. Information and specifications subject to change without notice.
All values are design or typical values when measured under laboratory conditions.

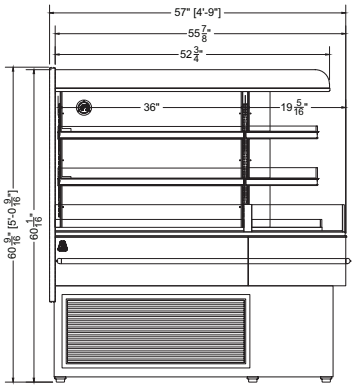

Side View - 04.5-F-S

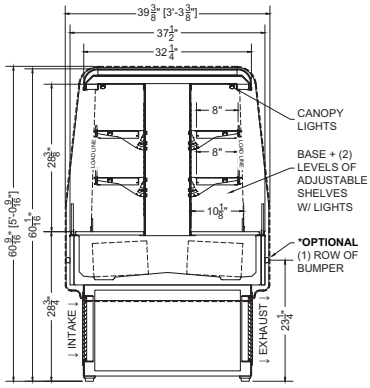

Section View - 04.5-F-S

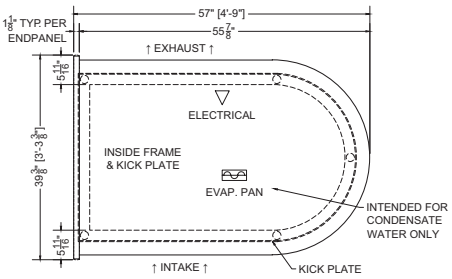

Plan Mechanical View - 04.5-F-S

05.5-MDI-3N1F-S | Placid Multideck Island Merchandiser

QTY	DESCRIPTION	PART NUMBER	VOLTAGE	PHASE	AMPS	TOTAL AMPS
4	12" LED 3500K, FROSTED, 24V	LG-FX-XXX-X	115V	1	0.02	0.08
6	45" LED 3500K, FROSTED, 24V	LG-FX-XXX-X	115V	1	0.09	0.54
8	EVAPORATOR FAN	AFXXX	115V	1	0.24	1.92
1	CONDENSING UNIT	RF-CU-0419	208/230V	1	11.70	11.70
1	CONDENSATE EVAP PAN / 1500W / FULL	EL-EV-XXXX	208V	1	7.21	7.21

CIRCUIT#1 **TOTAL AMPS:** 21.45 **VOLTAGE:** 208-230/1/60, 3-WIRE **CONNECTION:** L14-30P
SHIPPING DIMENSIONS: 80" X 48" X 72" **PACKOUT VOLUME:** 20.29 CUBIC FT.
WEIGHT: 1060 LBS. **INTERNAL VOLUME:** 27.89 CUBIC FT.

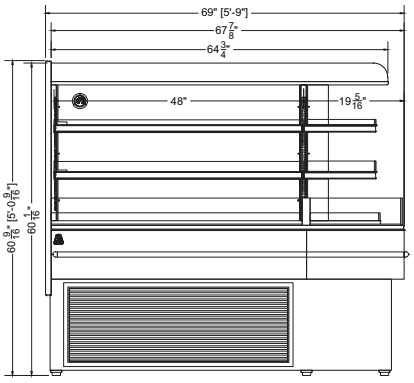

Side View - 05.5-F-S

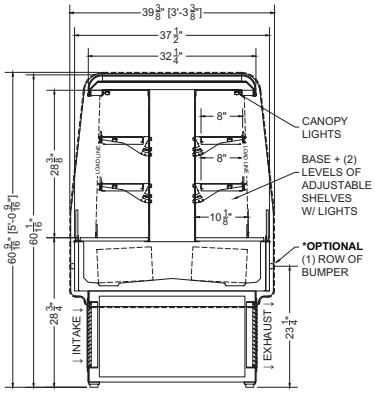

Section View - 05.5-F-S

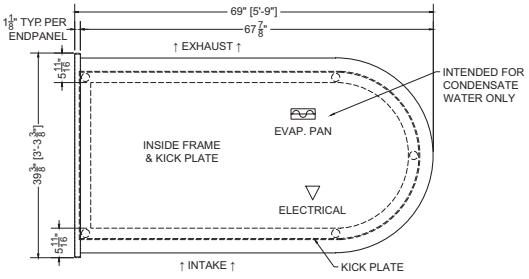

Plan Mechanical View - 05.5-F-S

03.6-MDI-3N1P-R | Placid Multideck Island Merchandiser

QTY	DESCRIPTION	PART NUMBER	VOLTAGE	PHASE	AMPS	TOTAL AMPS
2	12" LED 3500K, FROSTED, 24V	LG-FX-XXX-X	115V	1	0.02	0.04
2	18" LED 3500K, FROSTED, 24V	LG-FX-XXX-X	115V	1	0.03	0.06
6	23" LED 3500K, FROSTED, 24V	LG-FX-XXX-X	115V	1	0.04	0.24
6	EVAPORATOR FAN	AFXXX	115V	1	0.24	1.44

CIRCUIT#1 (LIGHTS) **TOTAL AMPS:** 0.34 **VOLTAGE:**115/1/60 **CONNECTION:** HARDWIRED
CIRCUIT#1 (FANS) **TOTAL AMPS:** 1.44 **VOLTAGE:**115/1/60 **CONNECTION:** HARDWIRED
MODEL: MDI-3N **APPLICATION:** DELI **BTUH:** 6050 **EVAP TEMP:** 20°F
DEFROST: TIME-OFF, 4/40 MIN, 47° TEMP TERMINATION
SHIPPING DIMENSIONS: 56" X 48" X 72" **PACKOUT VOLUME:** 13.90 CUBIC FT.
WEIGHT: 640 LBS. **INTERNAL VOLUME:** 18.94 CUBIC FT.

© 2025 Southern CaseArts. All rights reserved. Information and specifications subject to change without notice.
All values are design or typical values when measured under laboratory conditions.

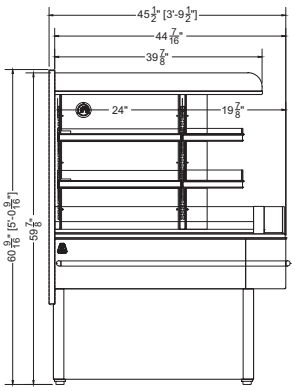

Side View - 03.6-P-R

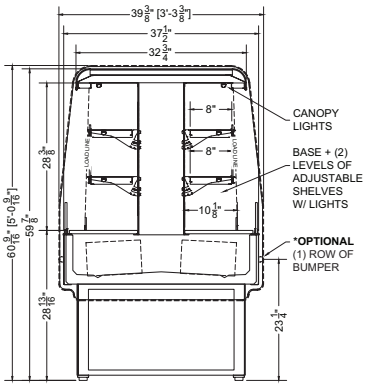

Section View - 03.6-P-R

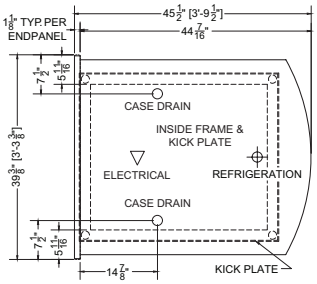

Plan Mechanical View - 03.6-P-R

04.6-MDI-3N1P-R | Placid Multideck Island Merchandiser

QTY	DESCRIPTION	PART NUMBER	VOLTAGE	PHASE	AMPS	TOTAL AMPS
2	12" LED 3500K, FROSTED, 24V	LG-FX-XXX-X	115V	1	0.02	0.04
2	18" LED 3500K, FROSTED, 24V	LG-FX-XXX-X	115V	1	0.03	0.06
6	34" LED 3500K, FROSTED, 24V	LG-FX-XXX-X	115V	1	0.07	0.42
6	EVAPORATOR FAN	AFXXX	115V	1	0.24	1.44

CIRCUIT#1 (LIGHTS) **TOTAL AMPS:** 0.52 **VOLTAGE:**115/1/60 **CONNECTION:** HARDWIRED
CIRCUIT#1 (FANS) **TOTAL AMPS:** 1.44 **VOLTAGE:**115/1/60 **CONNECTION:** HARDWIRED
MODEL: MDI-3N **APPLICATION:** DELI **BTUH:** 7200 **EVAP TEMP:** 20°F
DEFROST: TIME-OFF, 4/40 MIN, 47° TEMP TERMINATION
SHIPPING DIMENSIONS: 72" X 48" X 72" **PACKOUT VOLUME:** 17.77 CUBIC FT.
WEIGHT: 750 LBS. **INTERNAL VOLUME:** 24.01 CUBIC FT.

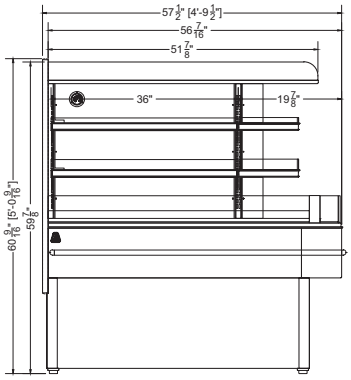

Side View - 04.6-P-R

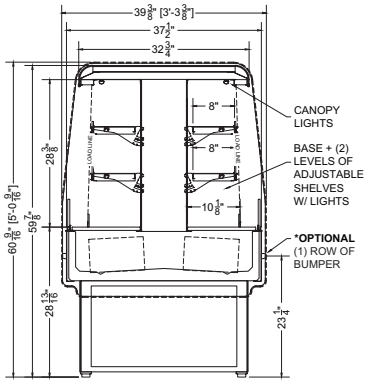

Section View - 04.6-P-R

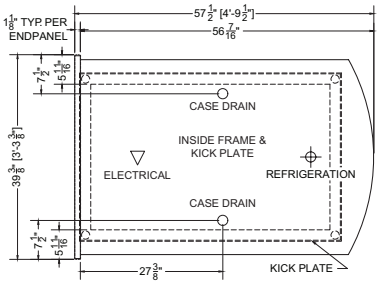

Plan Mechanical View - 04.6-P-R

05.6-MDI-3N1P-R | Placid Multideck Island Merchandiser

QTY	DESCRIPTION	PART NUMBER	VOLTAGE	PHASE	AMPS	TOTAL AMPS
2	12" LED 3500K, FROSTED, 24V	LG-FX-XXX-X	115V	1	0.02	0.04
2	18" LED 3500K, FROSTED, 24V	LG-FX-XXX-X	115V	1	0.03	0.06
6	45" LED 3500K, FROSTED, 24V	LG-FX-XXX-X	115V	1	0.09	0.54
8	EVAPORATOR FAN	AFXXX	115V	1	0.24	1.92

CIRCUIT#1 (LIGHTS) **TOTAL AMPS:** 0.64 **VOLTAGE:**115/1/60 **CONNECTION:** HARDWIRED
CIRCUIT#1 (FANS) **TOTAL AMPS:** 1.92 **VOLTAGE:**115/1/60 **CONNECTION:** HARDWIRED
MODEL: MDI-3N **APPLICATION:** DELI **BTUH:** 7910 **EVAP TEMP:** 20°F
DEFROST: TIME-OFF, 4/40 MIN, 47° TEMP TERMINATION
SHIPPING DIMENSIONS: 80" X 48" X 72" **PACKOUT VOLUME:** 21.65 CUBIC FT.
WEIGHT: 860 LBS. **INTERNAL VOLUME:** 29.08 CUBIC FT.

** 3N1PX available with an extra level of shelving*

© 2025 Southern CaseArts. All rights reserved. Information and specifications subject to change without notice.
All values are design or typical values when measured under laboratory conditions.

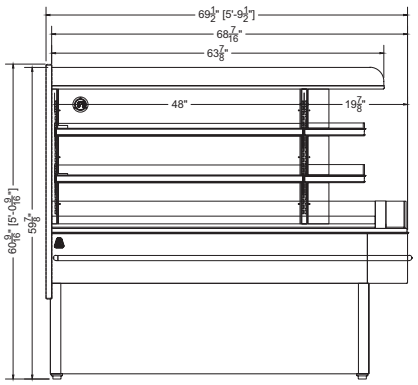

Side View - 05.6-P-R

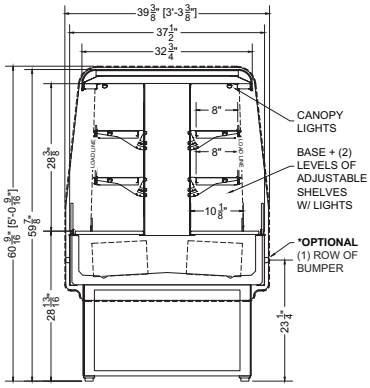

Section View - 05.6-P-R

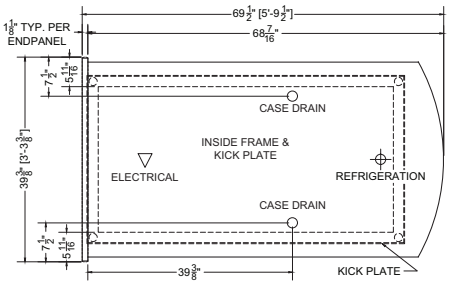

Plan Mechanical View - 05.6-P-R

03.6-MDI-3N1P-S | Placid Multideck Island Merchandiser

QTY	DESCRIPTION	PART NUMBER	VOLTAGE	PHASE	AMPS	TOTAL AMPS
2	12" LED 3500K, FROSTED, 24V	LG-FX-XXX-X	115V	1	0.02	0.04
2	18" LED 3500K, FROSTED, 24V	LG-FX-XXX-X	115V	1	0.03	0.06
6	23" LED 3500K, FROSTED, 24V	LG-FX-XXX-X	115V	1	0.04	0.24
6	EVAPORATOR FAN	AFXXX	115V	1	0.24	1.44
1	CONDENSING UNIT	RF-CU-0388-A	208/230V	1	9.80	9.80
1	CONDENSATE EVAP PAN / 1500W / HALF	EL-EV-XXXX	208V	1	7.21	7.21

CIRCUIT#1 **TOTAL AMPS:** 18.79 **VOLTAGE:**208-230/1/60, 3-WIRE **CONNECTION:** L14-30P
SHIPPING DIMENSIONS: 56" X 48" X 72" **PACKOUT VOLUME:** 13.90 CUBIC FT.
WEIGHT: 760 LBS. **INTERNAL VOLUME:** 18.94 CUBIC FT.

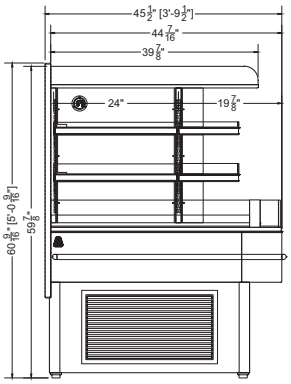

Side View - 03.6-P-S

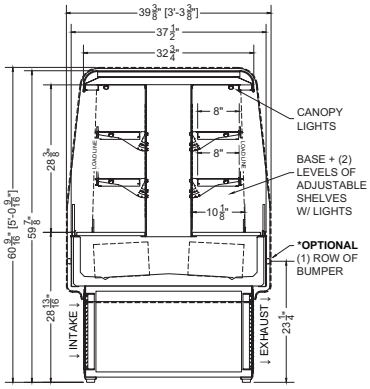

Section View - 03.6-P-S

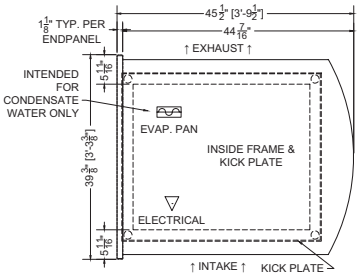

Plan Mechanical View - 03.6-P-S

04.6-MDI-3N1P-S | Placid Multideck Island Merchandiser

QTY	DESCRIPTION	PART NUMBER	VOLTAGE	PHASE	AMPS	TOTAL AMPS
2	12" LED 3500K, FROSTED, 24V	LG-FX-XXX-X	115V	1	0.02	0.04
2	18" LED 3500K, FROSTED, 24V	LG-FX-XXX-X	115V	1	0.03	0.06
6	34" LED 3500K, FROSTED, 24V	LG-FX-XXX-X	115V	1	0.07	0.42
6	EVAPORATOR FAN	AFXXX	115V	1	0.24	1.44
1	CONDENSING UNIT	RF-CU-0454-A	208V	1	10.80	10.80
1	CONDENSATE EVAP PAN / 1500W / FULL	EL-EV-XXXX	208V	1	7.21	7.21

CIRCUIT#1 **TOTAL AMPS:** 19.97 **VOLTAGE:**208-230/1/60, 3-WIRE **CONNECTION:** L14-30P
SHIPPING DIMENSIONS: 72" X 48" X 72" **PACKOUT VOLUME:** 17.77 CUBIC FT.
WEIGHT: 950 LBS. **INTERNAL VOLUME:** 24.01 CUBIC FT.

© 2025 Southern CaseArts. All rights reserved. Information and specifications subject to change without notice.
All values are design or typical values when measured under laboratory conditions.

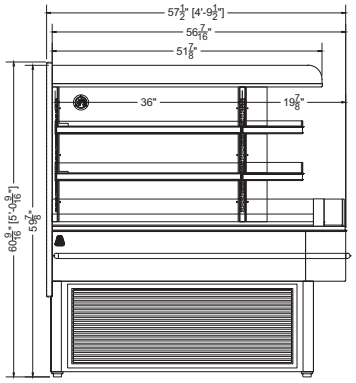

Side View - 04.6-P-S

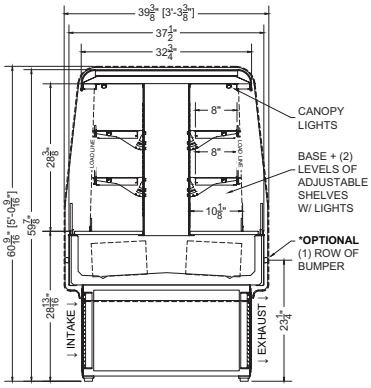

Section View - 04.6-P-S

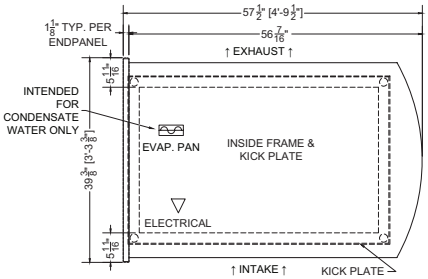

Plan Mechanical View - 04.6-P-S

05.6-MDI-3N1P-S | Placid Multideck Island Merchandiser

QTY	DESCRIPTION	PART NUMBER	VOLTAGE	PHASE	AMPS	TOTAL AMPS
2	12" LED 3500K, FROSTED, 24V	LG-FX-XXX-X	115V	1	0.02	0.04
2	18" LED 3500K, FROSTED, 24V	LG-FX-XXX-X	115V	1	0.03	0.06
6	45" LED 3500K, FROSTED, 24V	LG-FX-XXX-X	115V	1	0.09	0.54
8	EVAPORATOR FAN	AFXXX	115V	1	0.24	1.92
1	CONDENSING UNIT	RF-CU-0419	208-230V	1	11.70	11.70
1	CONDENSATE EVAP PAN / 1500W / FULL	EL-EV-XXXX	208V	1	7.21	7.21
1	CONDENSATE PUMP	RF-MS-0442	115V	1	2.00	2.00

CIRCUIT#1 **TOTAL AMPS:** 21.47 **VOLTAGE:** 208-230/1/60, 3-WIRE **CONNECTION:** L14-30P
SHIPPING DIMENSIONS: 80" X 48" X 72" **PACKOUT VOLUME:** 21.65 CUBIC FT.
WEIGHT: 1050 LBS. **INTERNAL VOLUME:** 29.08 CUBIC FT.
* OPTIONAL COMPONENT LOAD INCLUDED: EVAP PAN CAN BE REPLACED WITH PUMP

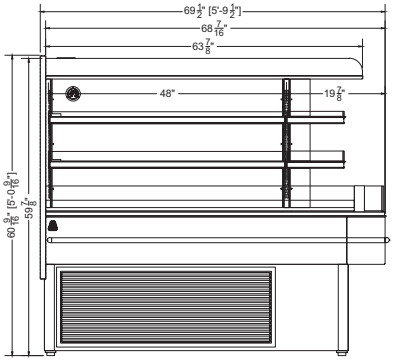

Side View - 05.6-P-S

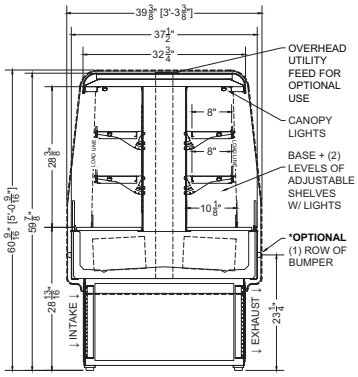

Section View - 05.6-P-S

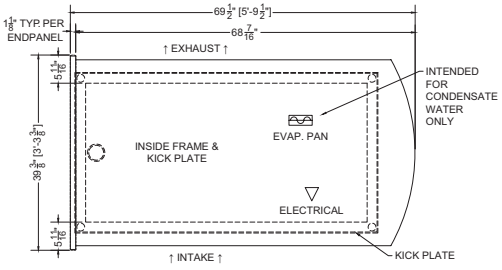

Plan Mechanical View - 05.6-P-S

05.6-MDI-3M1P-S | Placid Multideck Island Merchandiser

QTY	DESCRIPTION	PART NUMBER	VOLTAGE	PHASE	AMPS	TOTAL AMPS
2	12" LED 3500K, FROSTED, 24V	LG-FX-XXX-X	115V	1	0.02	0.04
2	18" LED 3500K, FROSTED, 24V	LG-FX-XXX-X	115V	1	0.03	0.06
6	45" LED 3500K, FROSTED, 24V	LG-FX-XXX-X	115V	1	0.09	0.54
8	AXIAL FAN	AFXXX	115V	1	0.24	1.92
1	CONDENSING UNIT	RF-CU-0419	208-230V	1	11.70	11.70
1	CONDENSATE EVAP PAN / 1500W / FULL	EL-EV-XXXX	208V	1	7.21	7.21

CIRCUIT#1 **TOTAL AMPS:** 21.47 **VOLTAGE:** 208-230/1/60, 3-WIRE **CONNECTION:** L14-30P
SHIPPING DIMENSIONS: 84" X 60" X 70" **PACKOUT VOLUME:** 28.01 CUBIC FT.
WEIGHT: 1140 LBS. **INTERNAL VOLUME:** 36.54 CUBIC FT.

© 2025 Southern CaseArts. All rights reserved. Information and specifications subject to change without notice.
All values are design or typical values when measured under laboratory conditions.

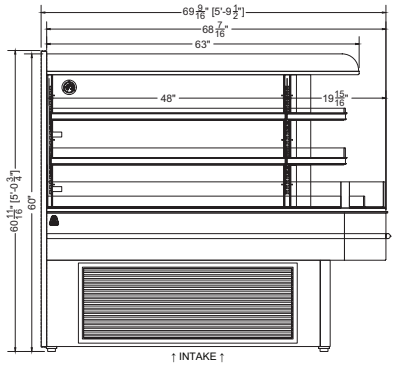

Side View - 05.6-P-S

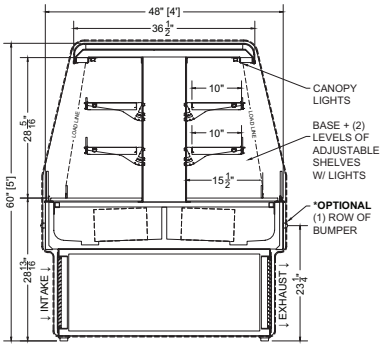

Section View - 05.6-P-S

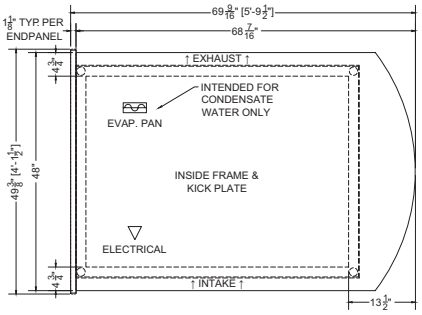

Plan Mechanical View - 05.6-P-S

06.2-MDI-3M2P-S | Placid Multideck Island Merchandiser

QTY	DESCRIPTION	PART NUMBER	VOLTAGE	PHASE	AMPS	TOTAL AMPS
4	12" LED 3500K, FROSTED, 24V	LG-FX-XXX-X	115V	1	0.02	0.08
4	18" LED 3500K, FROSTED, 24V	LG-FX-XXX-X	115V	1	0.03	0.12
4	34" LED 3500K, FROSTED, 24V	LG-FX-XXX-X	115V	1	0.07	0.28
2	45" LED 3500K, FROSTED, 24V	LG-FX-XXX-X	115V	1	0.09	0.18
8	AXIAL FAN	AFXXX	115V	1	0.24	1.92
1	CONDENSING UNIT	RF-CU-0419	208-230V	1	11.70	11.70
1	CONDENSATE EVAP PAN / 1500W / FULL	EL-EV-XXXX	208V	1	7.21	7.21

CIRCUIT#1 **TOTAL AMPS:** 21.49 **VOLTAGE:** 208-230/1/60, 3-WIRE **CONNECTION:** L14-30P
SHIPPING DIMENSIONS: 86" X 60" X 70" **PACKOUT VOLUME:** 34.94 CUBIC FT.
WEIGHT: 1110 LBS. **INTERNAL VOLUME:** 46.42 CUBIC FT.

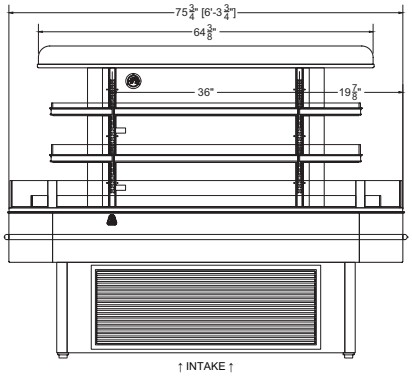

Side View - 06.2-P-S

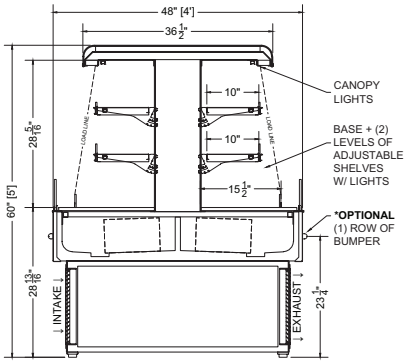

Section View - 06.2-P-S

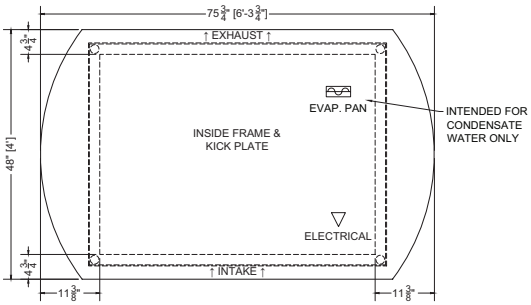

Plan Mechanical View - 06.2-P-S

11.2-MDI-3M2P-R | Placid Multideck Island Merchandiser

QTY	DESCRIPTION	PART NUMBER	VOLTAGE	PHASE	AMPS	TOTAL AMPS
4	12" LED 3500K, FROSTED, 24V	LG-FX-XXX-X	115V	1	0.02	0.08
4	12" LED 3500K, FROSTED, 24V	LG-FX-XXX-X	115V	1	0.03	0.12
12	45" LED 3500K, FROSTED, 24V	LG-FX-XXX-X	115V	1	0.09	1.08
10	EVAPORATOR FAN	RF-FA-XXXX	115V	1	0.17	1.70

CIRCUIT#1 (LIGHTS) **TOTAL AMPS:** 1.28 **VOLTAGE:**115/1/60 **CONNECTION:** HARDWIRED
CIRCUIT#1 (FANS) **TOTAL AMPS:** 1.70 **VOLTAGE:**115/1/60 **CONNECTION:** HARDWIRED
MODEL: MDI-3M **APPLICATION:** DELI **BTUH:** 18000 **EVAP TEMP:** 28°F
DEFROST: TIME-OFF, 4/40 MIN, 47° TEMP TERMINATION
SHIPPING DIMENSIONS: 148" X 60" X 70" **PACKOUT VOLUME:** 55.26 CUBIC FT.
WEIGHT: 1620 LBS. **INTERNAL VOLUME:** 72.92 CUBIC FT.

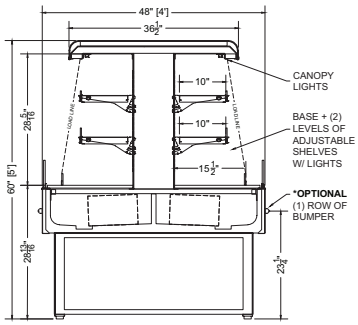

Section View - 11.2-P-R

© 2025 Southern CaseArts. All rights reserved. Information and specifications subject to change without notice.
All values are design or typical values when measured under laboratory conditions.

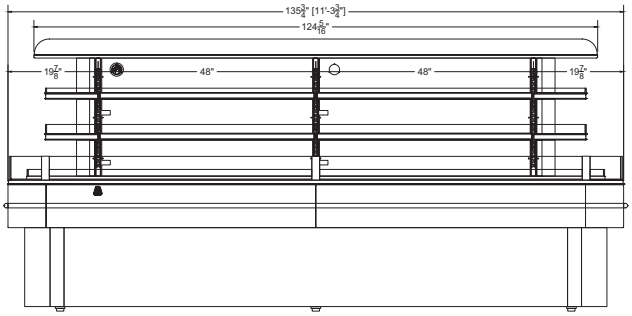

Side View - 11.2-P-R

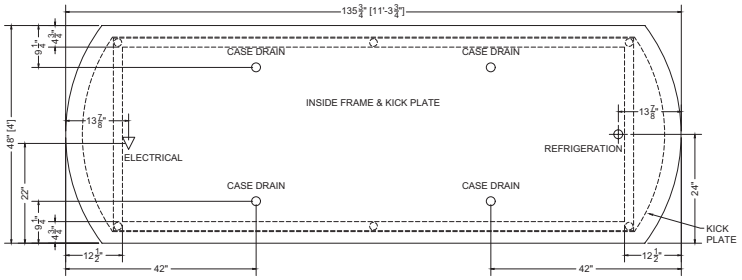

Plan Mechanical View - 11.2-P-R

13.0-MDI-3S2FT-R | Placid Multideck Island Merchandiser

QTY	DESCRIPTION	PART NUMBER	VOLTAGE	PHASE	AMPS	TOTAL AMPS
12	7" LED 3500K, FROSTED, 24V	LG-FX-XXX-X	115V	1	0.01	0.12
12	12" LED 3500K, FROSTED, 24V	LG-FX-XXX-X	115V	1	0.02	0.24
12	45" LED 3500K, FROSTED, 24V	LG-FX-XXX-X	115V	1	0.09	1.08
4	51" LED 3500K, FROSTED, 24V	LG-FX-XXX-X	115V	1	0.10	0.40
12	EVAPORATOR FAN	RF-FA-XXXX	115V	1	0.17	2.04

CIRCUIT#1 (LIGHTS) **TOTAL AMPS:** 1.84 **VOLTAGE:**115/1/60 **CONNECTION:** HARDWIRED
CIRCUIT#1 (FANS) **TOTAL AMPS:** 2.04 **VOLTAGE:**115/1/60 **CONNECTION:** HARDWIRED
MODEL: MDI-3S **APPLICATION:** DELI **BTUH:** 28600 **EVAP TEMP:** 22°F
DEFROST: TIME-OFF, 4/40 MIN, 47° TEMP TERMINATION **PACKOUT VOLUME:** 88.11 CUBIC FT.
INTERNAL VOLUME: 122.69 CUBIC FT.

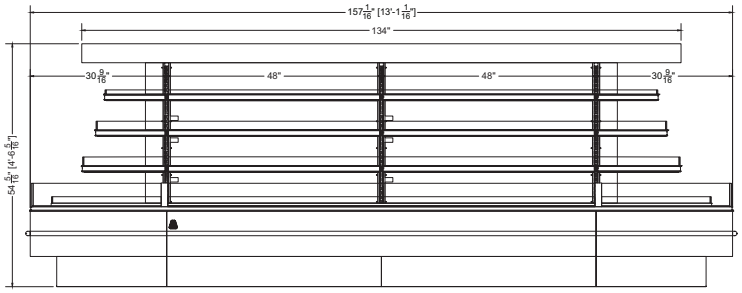

Side View - 13.0-T-R

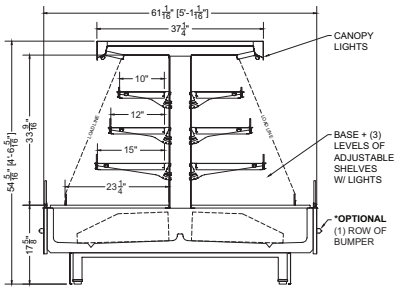

Section View - 13.0-T-R

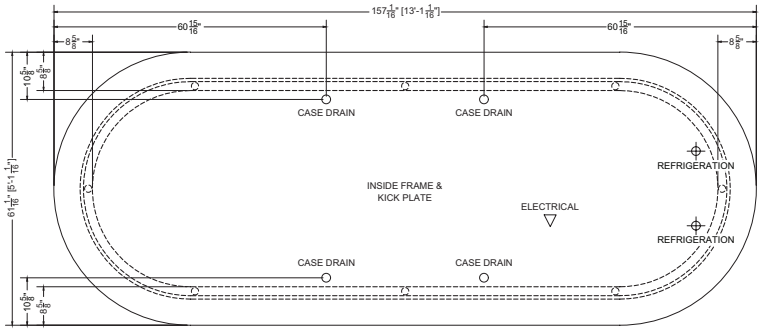

Plan Mechanical View - 13.0-T-R

© 2025 Southern CaseArts. All rights reserved. Information and specifications subject to change without notice.
All values are design or typical values when measured under laboratory conditions.

05.9-MDI-4M1F-R | Placid Multideck Island Merchandiser

QTY	DESCRIPTION	PART NUMBER	VOLTAGE	PHASE	AMPS	TOTAL AMPS
4	12” LED 3500K, FROSTED, 24V	LG-FX-XXX-X	115V	1	0.02	0.08
1	18” LED 3500K, FROSTED, 24V	LG-FX-XXX-X	115V	1	0.03	0.03
8	45” LED 3500K, FROSTED, 24V	LG-FX-XXX-X	115V	1	0.09	0.72
8	EVAPORATOR FAN	AFXXX	115V	1	0.24	1.92

CIRCUIT#1 (LIGHTS) **TOTAL AMPS:** 0.83 **VOLTAGE:**115/1/60 **CONNECTION:** HARDWIRED
CIRCUIT#1 (FANS) **TOTAL AMPS:** 1.92 **VOLTAGE:**115/1/60 **CONNECTION:** HARDWIRED
MODEL: MDI-4M **APPLICATION:** DELI **BTUH:** 9793 **EVAP TEMP:** 28°F
DEFROST: TIME-OFF, 4/40 MIN, 47° TEMP TERMINATION
SHIPPING DIMENSIONS: 86” X 60” X 76” **PACKOUT VOLUME:** 33.35 CUBIC FT.
WEIGHT: 1030 LBS. **INTERNAL VOLUME:** 42.64 CUBIC FT.

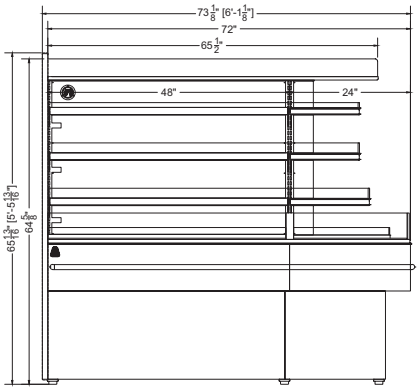

Side View - 05.9-F-R

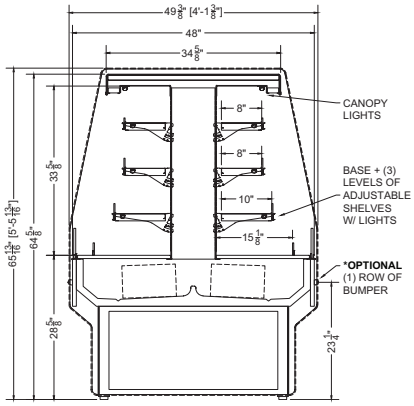

Section View - 05.9-F-R

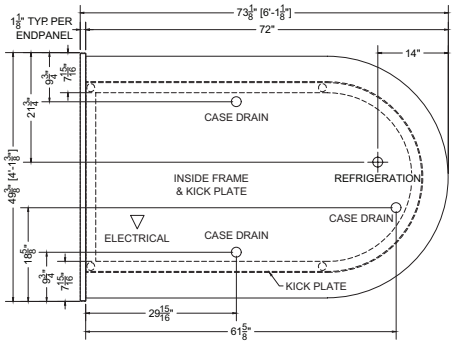

Plan Mechanical View - 05.9-F-R

05.9-MDI-4M1F-S | Placid Multideck Island Merchandiser

QTY	DESCRIPTION	PART NUMBER	VOLTAGE	PHASE	AMPS	TOTAL AMPS
4	12” LED 3500K, FROSTED, 24V	LG-FX-XXX-X	115V	1	0.02	0.08
1	18” LED 3500K, FROSTED, 24V	LG-FX-XXX-X	115V	1	0.03	0.03
8	45” LED 3500K, FROSTED, 24V	LG-FX-XXX-X	115V	1	0.09	0.72
8	EVAPORATOR FAN	AFXXX	115V	1	0.24	1.92
8	CONDENSING UNIT, R290	RF-CU-0520	208/230V	1	15.30	15.30
1	CONDENSATE EVAP PAN / 1000W / HALF / PTC	EL-EV-0087	208V	1	4.81	4.81
1	CONDENSING PUMP	RF-MS-2271	115V	1	1.73	1.73

* OPTIONAL COMPONENT LOAD INCLUDED: EVAP PAN CAN BE REPLACED WITH PUMP
* R290 (PROPANE) REFRIGERATION STANDARD
* ELECTRICAL INFO PRELIMINARY AND SUBJECT TO CHANGE

CIRCUIT#1 **TOTAL AMPS:** 21.66 **VOLTAGE:** 208-230/1/60, 3-WIRE **CONNECTION:** L14-30P
SHIPPING DIMENSIONS: 86” X 60” X 76” **PACKOUT VOLUME:** 33.35 CUBIC FT.
WEIGHT: 1250 LBS. **INTERNAL VOLUME:** 42.32 CUBIC FT.

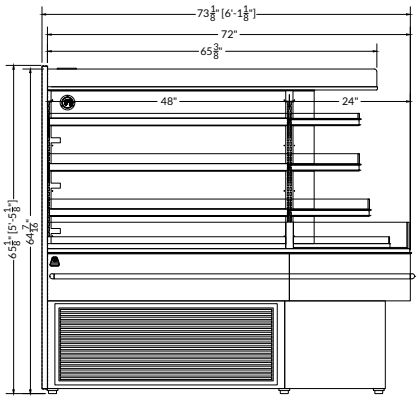

Side View - 05.9-F-S

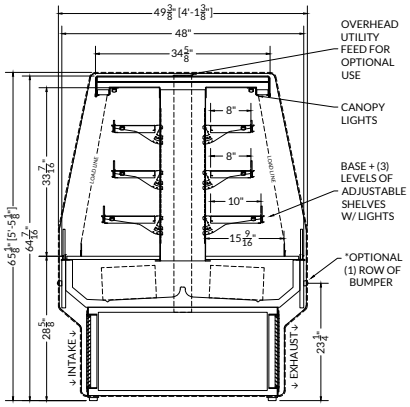

Section View - 05.9-F-S

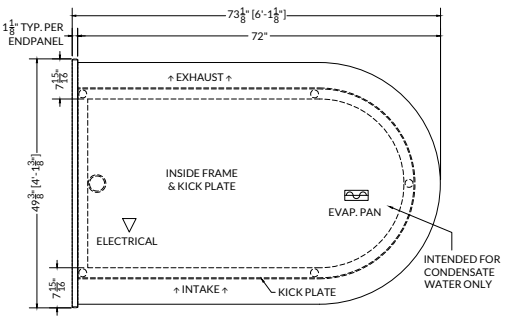

Plan Mechanical View - 05.9-F-S

© 2025 Southern CaseArts. All rights reserved. Information and specifications subject to change without notice.
All values are design or typical values when measured under laboratory conditions.

07.9-MDI-4M2F-R | Placid Multideck Island Merchandiser

QTY	DESCRIPTION	PART NUMBER	VOLTAGE	PHASE	AMPS	TOTAL AMPS
8	12” LED 3500K, FROSTED, 24V	LG-FX-XXX-X	115V	1	0.02	0.16
2	18” LED 3500K, FROSTED, 24V	LG-FX-XXX-X	115V	1	0.03	0.06
8	45” LED 3500K, FROSTED, 24V	LG-FX-XXX-X	115V	1	0.09	0.72
8	EVAPORATOR FAN	AFXXX	115V	1	0.24	1.92

CIRCUIT#1 (LIGHTS) **TOTAL AMPS:** 0.94 **VOLTAGE:**115/1/60 **CONNECTION:** HARDWIRED
CIRCUIT#1 (FANS) **TOTAL AMPS:** 1.92 **VOLTAGE:**115/1/60 **CONNECTION:** HARDWIRED
MODEL: MDI-4M **APPLICATION:** DELI **BTUH:** 13256 **EVAP TEMP:** 28°F
DEFROST: TIME-OFF, 4/40 MIN, 47° TEMP TERMINATION
SHIPPING DIMENSIONS: 108” X 60” X 76” **PACKOUT VOLUME:** 42.19 CUBIC FT.
WEIGHT: 1355 LBS. **INTERNAL VOLUME:** 54.88 CUBIC FT.

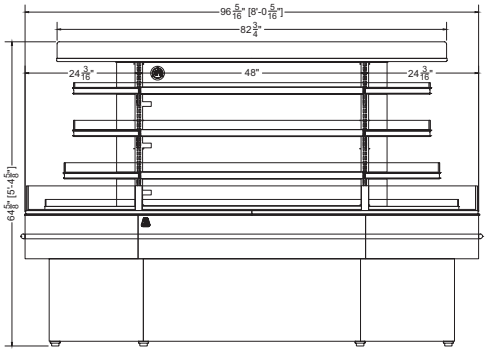

Side View - 07.9-F-R

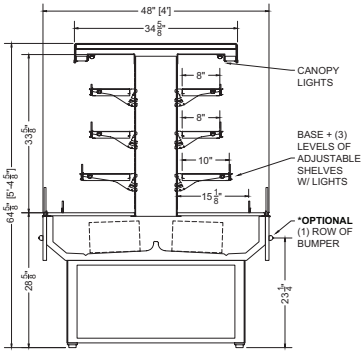

Section View - 07.9-F-R

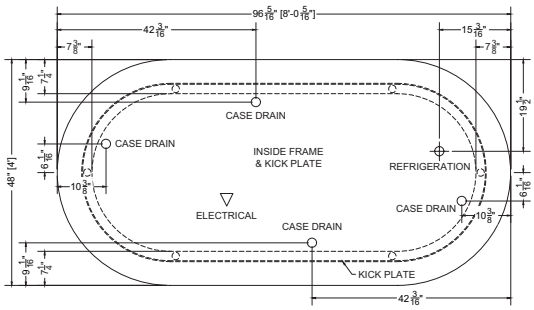

Plan Mechanical View - 07.9-F-R

07.9-MDI-4M2F-S | Placid Multideck Island Merchandiser

QTY	DESCRIPTION	PART NUMBER	VOLTAGE	PHASE	AMPS	TOTAL AMPS
8	12” LED 3500K, FROSTED, 24V	LG-FX-XXX-X	115V	1	0.02	0.16
2	18” LED 3500K, FROSTED, 24V	LG-FX-XXX-X	115V	1	0.03	0.06
8	45” LED 3500K, FROSTED, 24V	LG-FX-XXX-X	115V	1	0.09	0.72
8	EVAPORATOR FAN	AFXXX	115V	1	0.24	1.92
1	CONDENSING UNIT	RF-CU-0457-A	208V	1	11.50	11.50
1	CONDENSATE EVAP PAN / 1500W / FULL	EL-EV-XXXX	208V	1	7.21	7.21

CIRCUIT#1 **TOTAL AMPS:** 21.57 **VOLTAGE:** 208-230/1/60, 3-WIRE **CONNECTION:** L14-30P
SHIPPING DIMENSIONS: 108” X 60” X 76” **PACKOUT VOLUME:** 42.19 CUBIC FT.
WEIGHT: 1355 LBS. **INTERNAL VOLUME:** 54.88 CUBIC FT.

CONFORMS TO UL STD 471.
CONFORMS TO NSF STD 7.
CERTIFIED TO CAN/CSA STD C22.2 NO. 120.

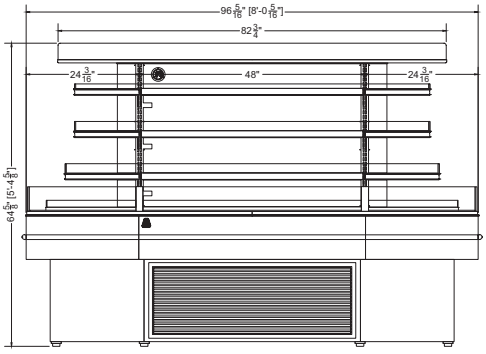

Side View - 07.9-F-S

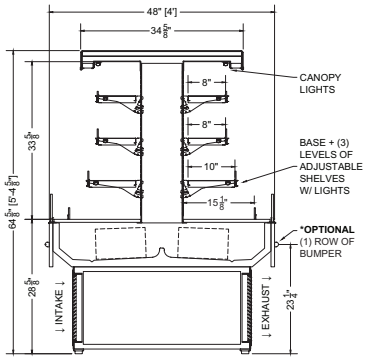

Section View - 07.9-F-S

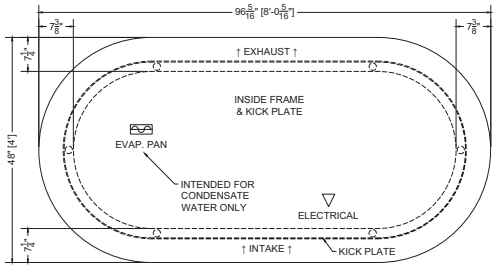

Plan Mechanical View - 07.9-F-S

For more information on the Placid Multideck Island Merchandiser, contact one of our **Southern CaseArts** representatives or check out our website to learn more about all of the products offered by **Southern CaseArts.**

© 2025 Southern CaseArts. All rights reserved. Information and specifications subject to change without notice.
All values are design or typical values when measured under laboratory conditions.