SOUTHERN CaseArts
An LSI Company

Project Name _____
Model # _____ Qty _____ Item # _____
Approval _____ AIA# _____ SIS# _____

Cypress
Produce Merchandiser | Cold
LMRM-RPC-S

southerncasearts.com | 800.552.6283



OVERVIEW

The **Cypress Produce Merchandiser** from **Southern CaseArts** offers convenience and flexibility to your produce department. This self-contained case is available in two lengths with an optional removable four-step riser to provide maximum display area for your fresh fruits and vegetables. The Cypress was designed to use returnable plastic crates of produce (RPC) which makes merchandising quick and easy. Customers will love the attractive open display with tempered glass sides and you will love that it can be easily moved throughout the department for seasonal merchandising.

STANDARD FEATURES

- **Nominal Length:** 6.0' & 8.0'
- **Interior Lighting:** Optional 3500K LED canopy light
- **Shelving:** Optional four step riser
- Self-Contained
- **Exterior:** Black powder coat

PRODUCT CATEGORIES

Produce

06.0-LMRM-RPC-S | Cypress Produce Merchandiser

QTY	DESCRIPTION	PART NUMBER	VOLTAGE	PHASE	AMPS	TOTAL AMPS
1	67" LED 3500K, FROSTED, 24V	LG-FX-XXX-X	115V	1	0.13	0.11
3	EVAPORATOR FAN	RF-FA-XXXX	115V	1	0.17	0.51
1	CONDENSING UNIT	RF-CU-0388-A	208/230V	1	9.80	9.80
1	CONDENSATE EVAP PAN / 1000W / FULL	EL-EV-XXXX	208V	1	4.81	4.81

CIRCUIT#1 **TOTAL AMPS:** 15.25 **VOLTAGE:** 208-230/1/60, 3-WIRE **CONNECTION:** L14-20P
PACKOUT VOLUME: 17.64 CUBIC FT.
* OPTIONAL COMPONENT LOAD INCLUDED **INTERNAL VOLUME:** 32.36 CUBIC FT.

NOTICE: THIS DISPLAY IS NOT FOR THE DISPLAY OF POTENTIALLY HAZARDOUS FOODS.

© 2026 **Southern CaseArts**, an LSI Company. All Rights Reserved Worldwide. Information and specifications subject to change without notice. All values are design or typical values when measured under laboratory conditions.

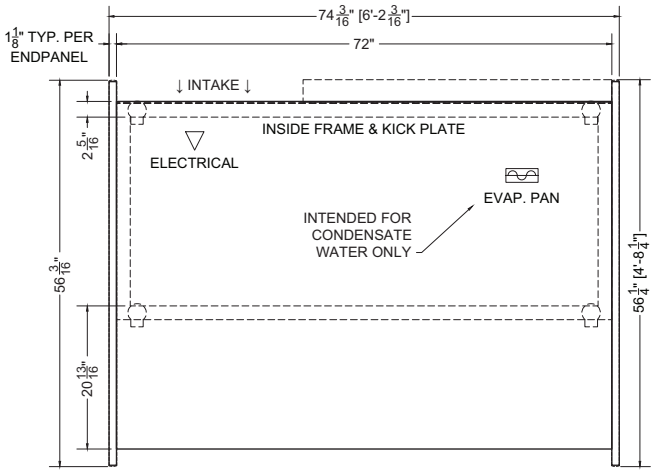

Plan Mechanical View

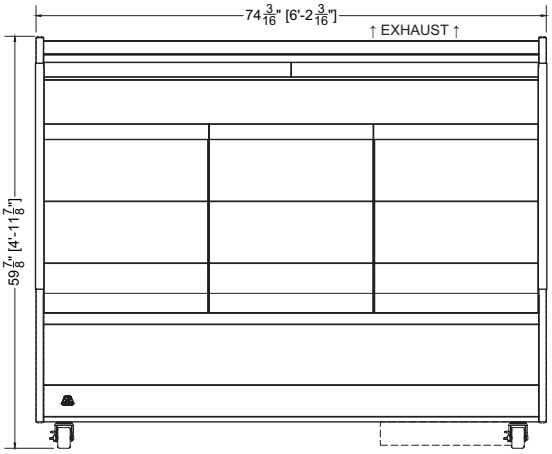

Front View

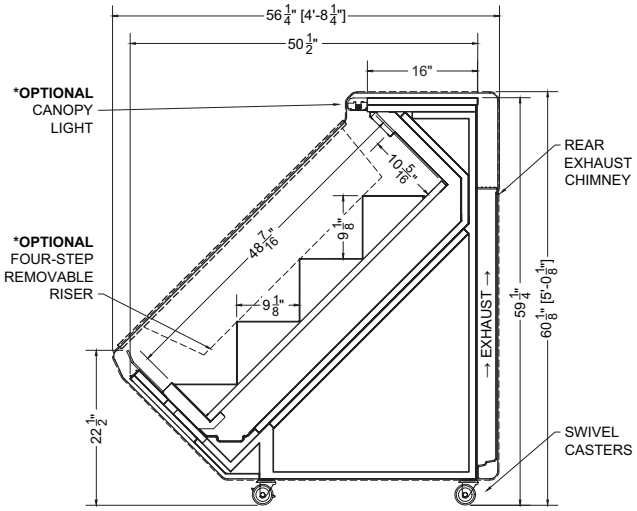

Section View

08.0-LMRM-RPC-S | Cypress Produce Merchandiser

QTY	DESCRIPTION	PART NUMBER	VOLTAGE	PHASE	AMPS	TOTAL AMPS
2	45" LED 3500K, FROSTED, 24V	LG-FX-XXX-X	115V	1	0.09	0.18
3	EVAPORATOR FAN	RF-FA-XXXX	115V	1	0.17	0.51
1	CONDENSING UNIT	RF-CU-0386-A	208/230V	1	8.10	8.10
1	CONDENSATE EVAP PAN / 1500W / FULL	EL-EV-XXXX	208V	1	7.21	7.21

CIRCUIT#1 **TOTAL AMPS:** 16.00 **VOLTAGE:** 208-230/1/60, 3-WIRE **CONNECTION:** L14-30P

PACKOUT VOLUME: 23.52 CUBIC FT.

* OPTIONAL COMPONENT LOAD INCLUDED **INTERNAL VOLUME:** 43.14 CUBIC FT.

NOTICE: THIS DISPLAY IS NOT FOR THE DISPLAY OF POTENTIALLY HAZARDOUS FOODS.

© 2026 **Southern CaseArts**, an LSI Company. All Rights Reserved Worldwide. Information and specifications subject to change without notice. All values are design or typical values when measured under laboratory conditions.

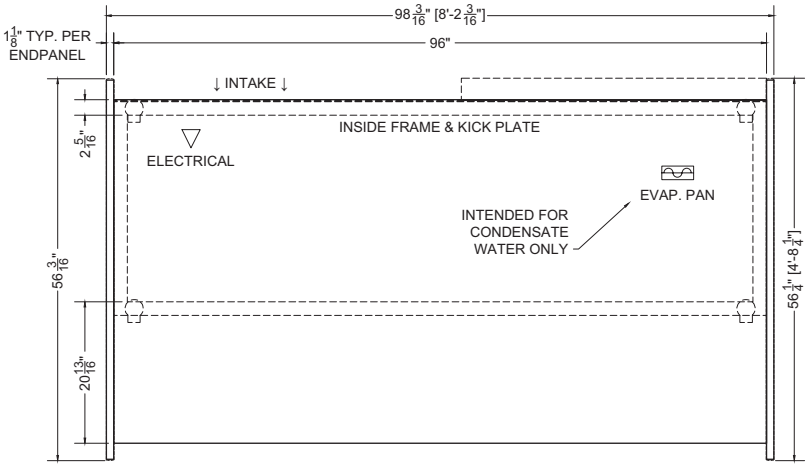

Plan Mechanical View

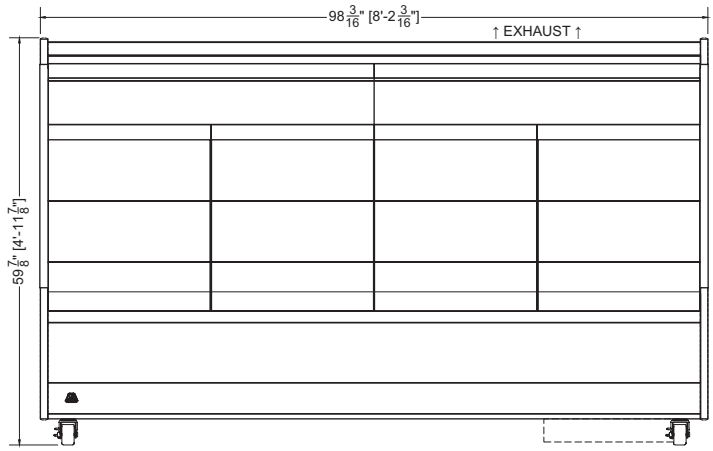

Front View

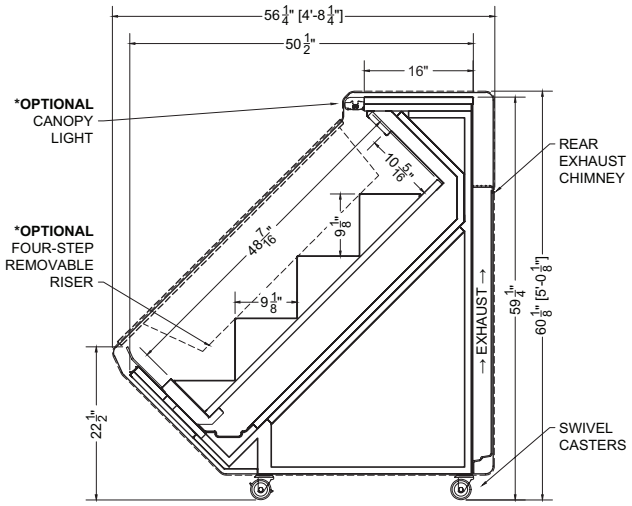

Section View

For more information on the Cypress Produce Merchandiser, contact one of our **Southern CaseArts** representatives or check out our website to learn more about all of the products offered by **Southern CaseArts.**

© 2026 **Southern CaseArts,** an LSI Company. All Rights Reserved Worldwide. Information and specifications subject to change without notice. All values are design or typical values when measured under laboratory conditions.