SOUTHERN CaseArts
An LSI Company

Project Name _____
Model # _____ Qty _____ Item # _____
Approval _____ AIA# _____ SIS# _____

Hemlock
Service Merchandiser | Cold
SCS-47ASBL-S& SCS-49ASIL-S

southerncasearts.com | 800.552.6283



OVERVIEW

The **Hemlock Service Merchandiser** from **Southern CaseArts** is sure to become a reliable favorite in your store. Available in four lengths and two style options, this case provides energy efficiency and maximum packout. The **Hemlock** features LED canopy lighting, full view tempered glass to really showcase meats, cheese, deli and dairy.

STANDARD FEATURES

- **Nominal Length:** 3.1', 4.1', 6.2' & 8.2'
- **Interior Lighting:** 2700K LED lights
- **Exterior:** Tempered glass, black powder coat and stainless steel

PRODUCT CATEGORIES

Meat | Deli | Cheese/ Dairy | Milk

03.1-SCS-47ASBL-S | Hemlock Service Merchandiser

QTY	DESCRIPTION	PART NUMBER	VOLTAGE	PHASE	AMPS	TOTAL AMPS
1	34" LED 2700K, 24V	LG-FX-XXX-X	115V	1	0.38	0.38
1	EVAPORATOR FAN	AFXXX	115V	1	0.20	0.20
1	AIR SWEEP FAN	AFXXX	115V	1	0.08	0.08
1	COMPRESSOR	---	115V	1	2.97	2.97
1	CONDENSER COIL FAN MOTOR	---	115V	1	0.20	0.20
1	EVAP PAN	---	115V	1	3.48	3.48
1	GLASS HEATER	---	115V	1	1.74	1.74

CIRCUIT#1 **TOTAL AMPS:** 9.05 **VOLTAGE:** 115/1/60 **CONNECTION:** 5-15P
MODEL: SCS-47ASBL **APPLICATION:** FRESH MEAT **BTUH:** 2637 **EVAP TEMP:** 14°F
DEFROST: TIME-OFF, 4/45MIN, 50° TEMP TERMINATION
* R290 (PROPANE) REFRIGERATION AVAILABLE

PACKOUT VOLUME: 5.09 CUBIC FT.
INTERNAL VOLUME: 14.27 CUBIC FT.

© 2026 **Southern CaseArts**, an LSI Company. All Rights Reserved Worldwide. Information and specifications subject to change without notice. All values are design or typical values when measured under laboratory conditions.

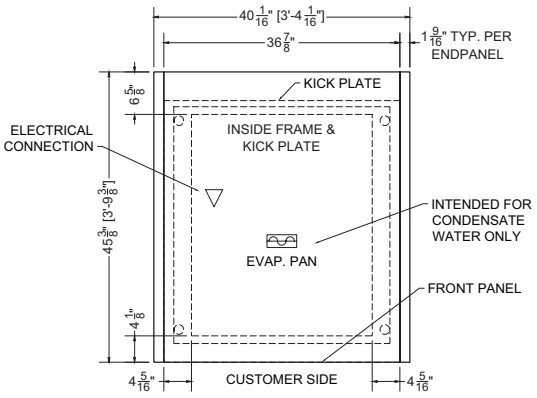

Plan Mechanical View

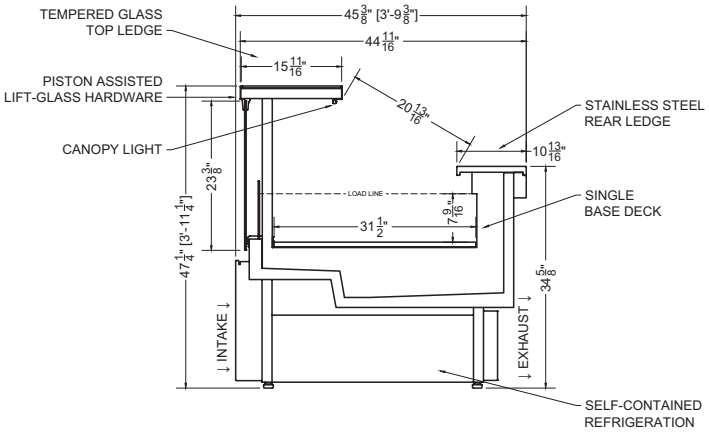

Section View

04.1-SCS-47ASBL-S | Hemlock Service Merchandiser

QTY	DESCRIPTION	PART NUMBER	VOLTAGE	PHASE	AMPS	TOTAL AMPS
1	45" LED 2700K, 24V	LG-FX-XXX-X	115V	1	0.50	0.50
1	EVAPORATOR FAN	AFXXX	115V	1	0.20	0.20
1	AIR SWEEP FAN	AFXXX	115V	1	0.08	0.08
1	COMPRESSOR	---	115V	1	2.84	2.84
1	CONDENSER COIL FAN MOTOR	---	115V	1	0.20	0.20
1	EVAP PAN	---	115V	1	3.48	3.48
1	GLASS HEATER	---	115V	1	2.17	2.17

CIRCUIT#1 **TOTAL AMPS:** 9.47 **VOLTAGE:** 115/1/60 **CONNECTION:** 5-15P
MODEL: SCS-47ASBL **APPLICATION:** FRESH MEAT **BTUH:** 2907 **EVAP TEMP:** 14°F
DEFROST: TIME-OFF, 4/45MIN, 50° TEMP TERMINATION
* R290 (PROPANE) REFRIGERATION AVAILABLE

PACKOUT VOLUME: 6.79 CUBIC FT.
INTERNAL VOLUME: 19.03 CUBIC FT.

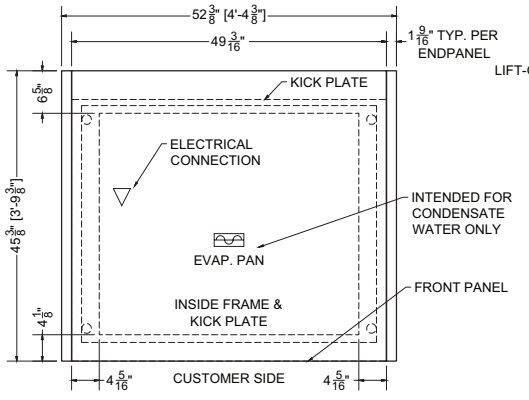

Plan Mechanical View

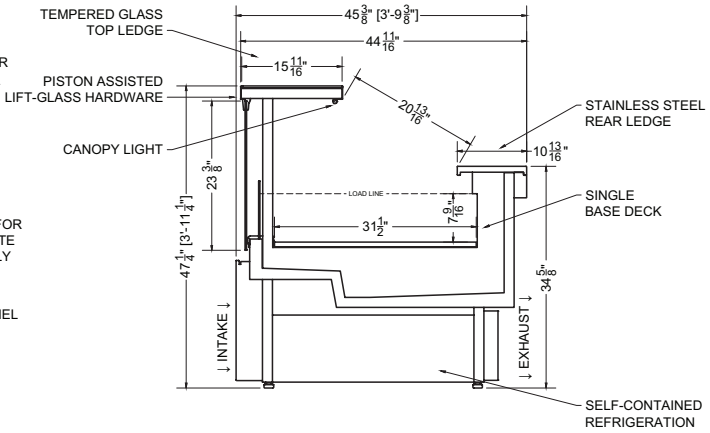

Section View

© 2026 **Southern CaseArts**, an LSI Company. All Rights Reserved Worldwide. Information and specifications subject to change without notice. All values are design or typical values when measured under laboratory conditions.

06.2-SCS-47ASBL-S | Hemlock Service Merchandiser

QTY	DESCRIPTION	PART NUMBER	VOLTAGE	PHASE	AMPS	TOTAL AMPS
2	34" LED 2700K, 24V	LG-FX-XXX-X	115V	1	0.38	0.75
2	EVAPORATOR FAN	AFXXX	115V	1	0.20	0.40
2	AIR SWEEP FAN	AFXXX	115V	1	0.08	0.16
1	COMPRESSOR	---	115V	1	4.22	4.22
1	CONDENSER COIL FAN MOTOR	---	115V	1	0.20	0.20
1	EVAP PAN	---	115V	1	6.09	6.09
1	GLASS HEATER	---	115V	1	3.48	3.48

CIRCUIT#1 **TOTAL AMPS:** 15.30 **VOLTAGE:** 115/1/60 **CONNECTION:** 5-20P
MODEL: SCS-47ASBL **APPLICATION:** FRESH MEAT **BTUH:** 3634 **EVAP TEMP:** 14°F
DEFROST: TIME-OFF, 4/45MIN, 50° TEMP TERMINATION
* R290 (PROPANE) REFRIGERATION AVAILABLE

PACKOUT VOLUME: 10.19 CUBIC FT.
INTERNAL VOLUME: 28.55 CUBIC FT.

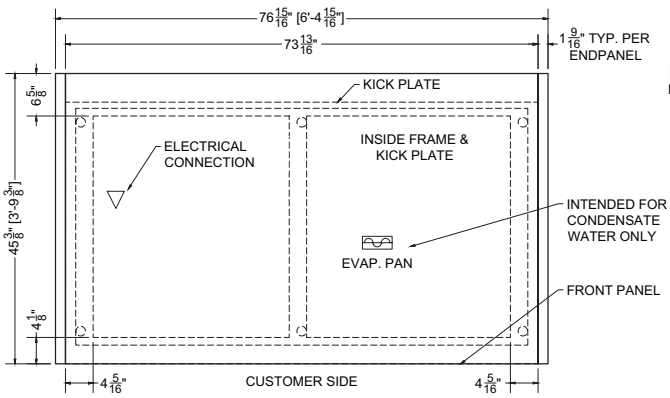

Plan Mechanical View

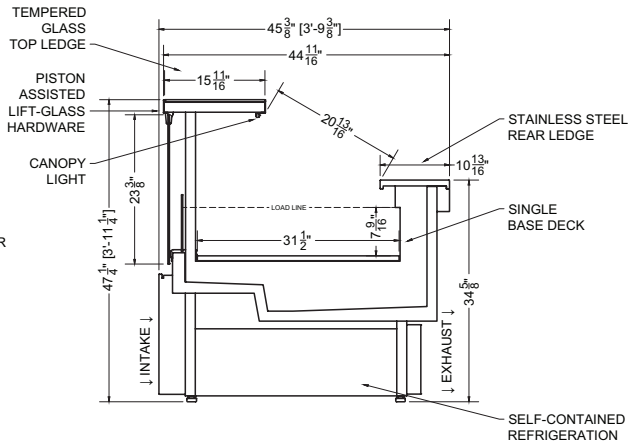

Section View

08.2-SCS-47ASBL-S | Hemlock Service Merchandiser

QTY	DESCRIPTION	PART NUMBER	VOLTAGE	PHASE	AMPS	TOTAL AMPS
2	45" LED 2700K, 24V	LG-FX-XXX-X	115V	1	0.50	1.00
2	EVAPORATOR FAN	AFXXX	115V	1	0.20	0.40
2	AIR SWEEP FAN	AFXXX	115V	1	0.08	0.16
1	COMPRESSOR	---	115V	1	5.95	5.95
2	CONDENSER COIL FAN MOTOR	---	115V	1	0.20	0.40
1	EVAP PAN	---	115V	1	6.09	6.09
1	GLASS HEATER	---	115V	1	5.22	5.22

CIRCUIT#1 **TOTAL AMPS:** 19.22 **VOLTAGE:** 115/1/60 **CONNECTION:** 5-30P
MODEL: SCS-47ASBL **APPLICATION:** FRESH MEAT **BTUH:** 5275 **EVAP TEMP:** 14°F
DEFROST: TIME-OFF, 4/45MIN, 50° TEMP TERMINATION
* R290 (PROPANE) REFRIGERATION AVAILABLE

PACKOUT VOLUME: 13.59 CUBIC FT.
INTERNAL VOLUME: 38.06 CUBIC FT.

© 2026 **Southern CaseArts**, an LSI Company. All Rights Reserved Worldwide. Information and specifications subject to change without notice. All values are design or typical values when measured under laboratory conditions.

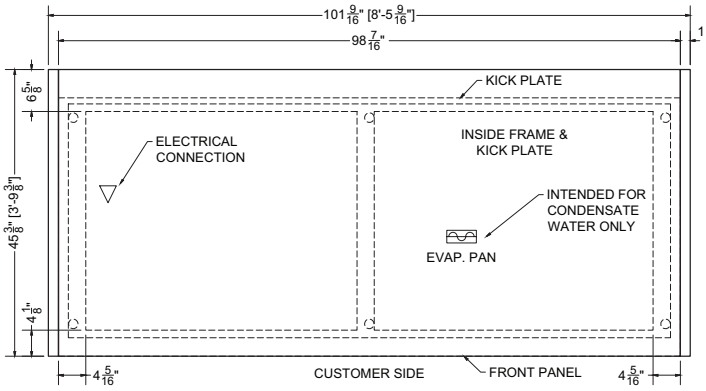

Plan Mechanical View

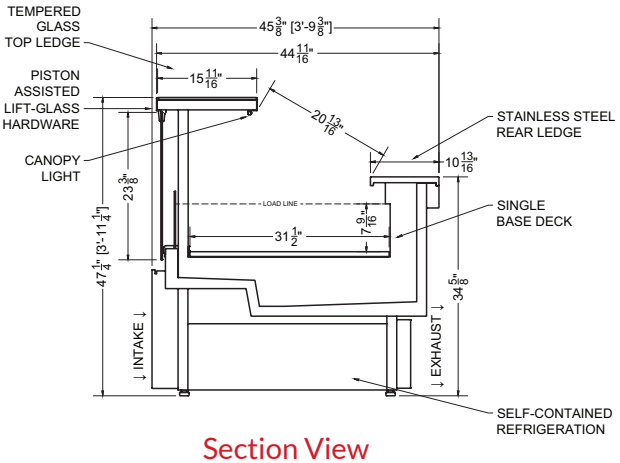

Section View

03.1-SCS-49ASIL-S | Hemlock Service Merchandiser

QTY	DESCRIPTION	PART NUMBER	VOLTAGE	PHASE	AMPS	TOTAL AMPS
1	34" LED 2700K, 24V	LG-FX-XXX-X	115V	1	0.38	0.38
1	EVAPORATOR FAN	AFXXX	115V	1	0.20	0.20
1	AIR SWEEP FAN	AFXXX	115V	1	0.08	0.08
1	COMPRESSOR	---	115V	1	2.97	2.97
1	CONDENSER COIL FAN MOTOR	---	115V	1	0.20	0.20
1	EVAP PAN	---	115V	1	3.48	3.48
1	GLASS HEATER	---	115V	1	1.74	1.74

CIRCUIT#1 **TOTAL AMPS:** 9.05 **VOLTAGE:** 115/1/60 **CONNECTION:** 5-15P
MODEL: SCS-49ASIL **APPLICATION:** FRESH MEAT **BTUH:** 2637 **EVAP TEMP:** 14°F
DEFROST: TIME-OFF, 4/45MIN, 50° TEMP TERMINATION
* R290 (PROPANE) REFRIGERATION AVAILABLE

PACKOUT VOLUME: 4.86 CUBIC FT.
INTERNAL VOLUME: 13.07 CUBIC FT.

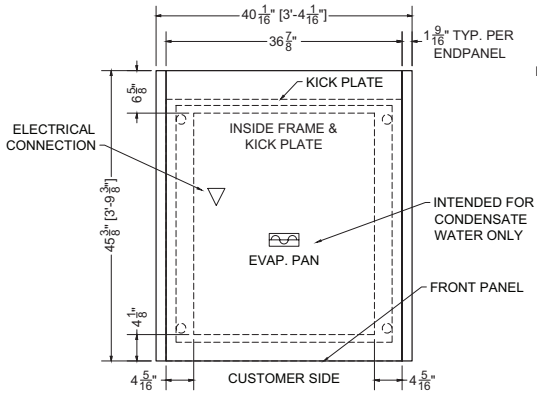

Plan Mechanical View

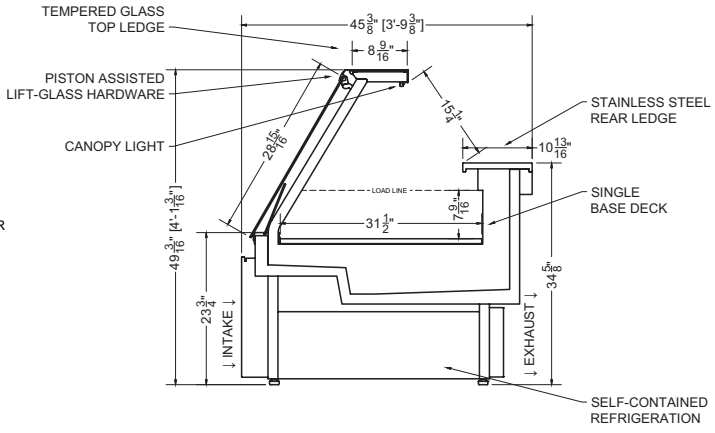

Section View

© 2026 **Southern CaseArts**, an LSI Company. All Rights Reserved Worldwide. Information and specifications subject to change without notice. All values are design or typical values when measured under laboratory conditions.

04.1-SCS-49ASIL-S | Hemlock Service Merchandiser

QTY	DESCRIPTION	PART NUMBER	VOLTAGE	PHASE	AMPS	TOTAL AMPS
1	45” LED 2700K, 24V	LG-FX-XXX-X	115V	1	0.50	0.50
1	EVAPORATOR FAN	AFXXX	115V	1	0.20	0.20
1	AIR SWEEP FAN	AFXXX	115V	1	0.08	0.08
1	COMPRESSOR	---	115V	1	2.84	2.84
1	CONDENSER COIL FAN MOTOR	---	115V	1	0.20	0.20
1	EVAP PAN	---	115V	1	3.48	3.48
1	GLASS HEATER	---	115V	1	2.17	2.17

CIRCUIT#1 **TOTAL AMPS:** 9.47 **VOLTAGE:** 115/1/60 **CONNECTION:** 5-15P
MODEL: SCS-47ASBL **APPLICATION:** FRESH MEAT **BTUH:** 2907 **EVAP TEMP:** 14°F
DEFROST: TIME-OFF, 4/45MIN, 50° TEMP TERMINATION
* R290 (PROPANE) REFRIGERATION AVAILABLE

PACKOUT VOLUME: 6.48 CUBIC FT.
INTERNAL VOLUME: 17.43 CUBIC FT.

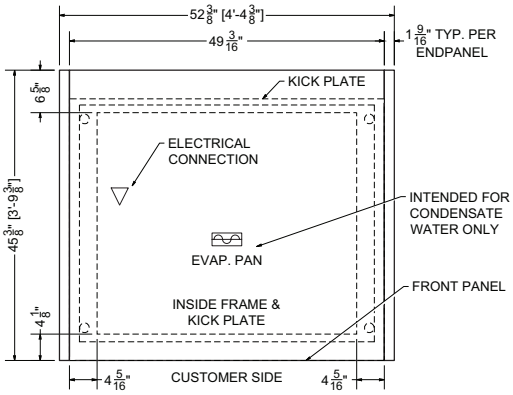

Plan Mechanical View

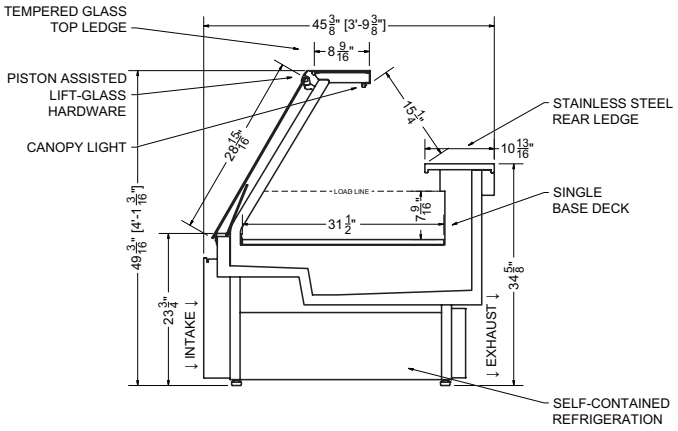

Section View

06.2-SCS-49ASIL-S | Hemlock Service Merchandiser

QTY	DESCRIPTION	PART NUMBER	VOLTAGE	PHASE	AMPS	TOTAL AMPS
2	34” LED 2700K, 24V	LG-FX-XXX-X	115V	1	0.38	0.75
2	EVAPORATOR FAN	AFXXX	115V	1	0.20	0.40
2	AIR SWEEP FAN	AFXXX	115V	1	0.08	0.16
1	COMPRESSOR	---	115V	1	4.22	4.22
1	CONDENSER COIL FAN MOTOR	---	115V	1	0.20	0.20
1	EVAP PAN	---	115V	1	6.09	6.09
1	GLASS HEATER	---	115V	1	3.48	3.48

CIRCUIT#1 **TOTAL AMPS:** 15.30 **VOLTAGE:** 115/1/60 **CONNECTION:** 5-20P
MODEL: SCS-49ASIL **APPLICATION:** FRESH MEAT **BTUH:** 3634 **EVAP TEMP:** 14°F
DEFROST: TIME-OFF, 4/45MIN, 50° TEMP TERMINATION
* R290 (PROPANE) REFRIGERATION AVAILABLE

PACKOUT VOLUME: 9.72 CUBIC FT.
INTERNAL VOLUME: 26.12 CUBIC FT.

© 2026 **Southern CaseArts**, an LSI Company. All Rights Reserved Worldwide. Information and specifications subject to change without notice. All values are design or typical values when measured under laboratory conditions.

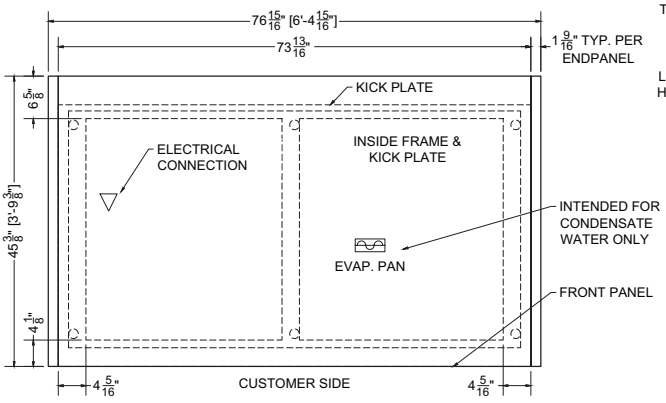

Plan Mechanical View

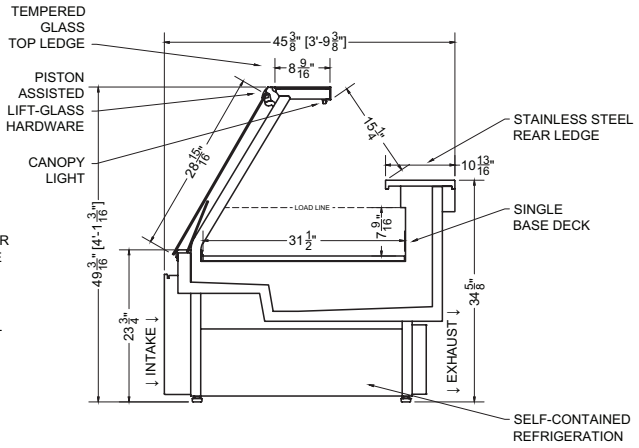

Section View

08.2-SCS-49ASIL-S | Hemlock Service Merchandiser

QTY	DESCRIPTION	PART NUMBER	VOLTAGE	PHASE	AMPS	TOTAL AMPS
2	45" LED 2700K, 24V	LG-FX-XXX-X	115V	1	0.50	1.00
2	EVAPORATOR FAN	AFXXX	115V	1	0.20	0.40
2	AIR SWEEP FAN	AFXXX	115V	1	0.08	0.16
1	COMPRESSOR	---	115V	1	5.95	5.95
2	CONDENSER COIL FAN MOTOR	---	115V	1	0.20	0.40
1	EVAP PAN	---	115V	1	6.09	6.09
1	GLASS HEATER	---	115V	1	5.22	5.22

CIRCUIT#1 **TOTAL AMPS:** 19.22 **VOLTAGE:** 115/1/60 **CONNECTION:** 5-30P
MODEL: SCS-49ASIL **APPLICATION:** FRESH MEAT **BTUH:** 5275 **EVAP TEMP:** 14°F
DEFROST: TIME-OFF, 4/45MIN, 50° TEMP TERMINATION
* R290 (PROPANE) REFRIGERATION AVAILABLE

PACKOUT VOLUME: 12.95 CUBIC FT.
INTERNAL VOLUME: 34.86 CUBIC FT.

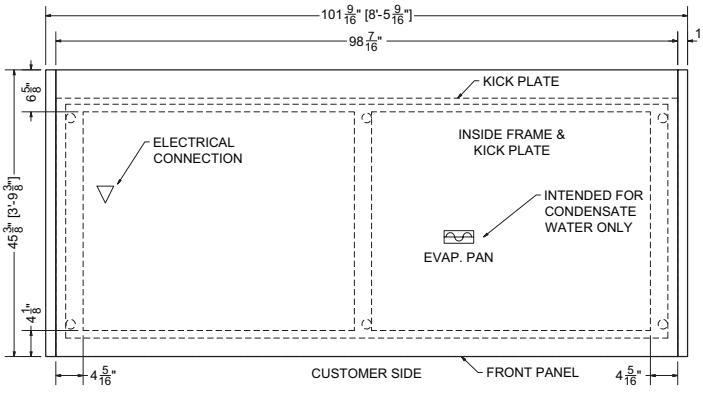

Plan Mechanical View

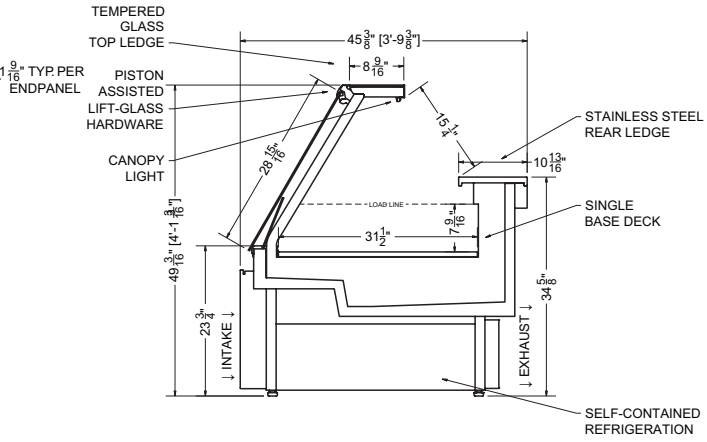

Section View

For more information on the Hemlock Service Merchandiser, contact one of our **Southern CaseArts** representatives or check out our website to learn more about all of the products offered by **Southern CaseArts.**

© 2026 **Southern CaseArts**, an LSI Company. All Rights Reserved Worldwide. Information and specifications subject to change without notice. All values are design or typical values when measured under laboratory conditions.