SOUTHERN CaseArts
An LSI Company

Project Name _____
Model # _____ Qty _____ Item # _____
Approval _____ AIA# _____ SIS# _____

Marquette
Open Deck Merchandiser | Cold
ODC-46AN-S



southerncasearts.com | 800.552.6283



OVERVIEW

The **Marquette Open Deck Merchandiser** from **Southern CaseArts** is an extremely versatile case. Featuring an open deck design with two adjustable shelves and LED lights, this case is sure to attract customers. Whether showcasing meat, cheese, dairy, bakery, sandwiches, prepared foods or beverages, the **Marquette** will be a favorite destination in your store.

STANDARD FEATURES

- **Nominal Length:** 4.1', 6.2', & 8.2'
- **Interior Lighting:** 4000K LED
- **Shelving:** 2 adjustable shelves with LED lights
- Self-Contained
- Optional night screen available
- **Exterior:** Black powder coat

PRODUCT CATEGORIES

Meat | Deli | Cheese/ Dairy | Milk | Snacks/ Sandwiches

Bakery | Chilled Beverages | Prepared Food

04.1-ODC-46AN-S | Marquette Open Deck Merchandiser

QTY	DESCRIPTION	PART NUMBER	VOLTAGE	PHASE	AMPS	TOTAL AMPS
3	45" LED 4000K, 24V	LG-FX-XXX-X	115V	1	0.11	0.32
2	EVAPORATOR FAN	AFXXX	115V	1	0.12	0.25
1	COMPRESSOR	---	115V	1	6.96	6.96
2	CONDENSER COIL FAN MOTOR	---	115V	1	0.11	0.23
1	EVAP PAN	---	115V	1	6.09	6.09

CIRCUIT#1 **TOTAL AMPS:** 13.85 **VOLTAGE:**115/1/60 **CONNECTION:** 5-20P
MODEL: ODC-46AN **APPLICATION:** DELI **BTUH:** 4692 **EVAP TEMP:** 14°F
DEFROST: TIME-OFF, 4/45MIN, 50° TEMP TERMINATION **PACKOUT VOLUME:** 11.24 CUBIC FT.
* R290 (PROPANE) REFRIGERATION AVAILABLE **INTERNAL VOLUME:** 14.26 CUBIC FT.

© 2026 **Southern CaseArts**, an LSI Company. All Rights Reserved Worldwide. Information and specifications subject to change without notice. All values are design or typical values when measured under laboratory conditions.

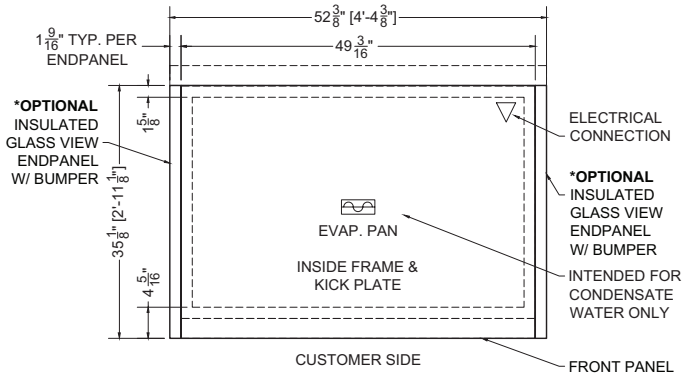

Plan Mechanical View

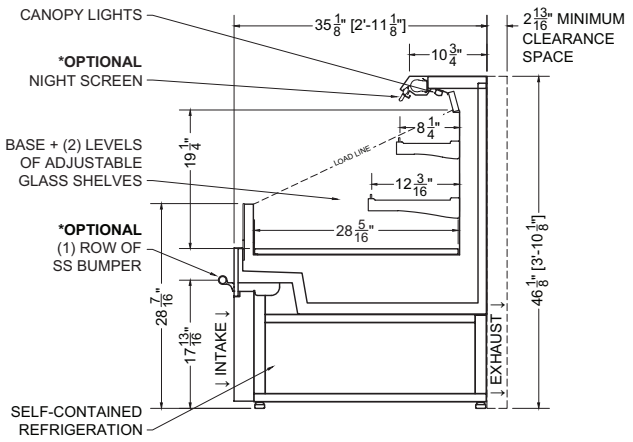

Section View

06.2-ODC-46AN-S | Marquette Open Deck Merchandiser

QTY	DESCRIPTION	PART NUMBER	VOLTAGE	PHASE	AMPS	TOTAL AMPS
6	33" LED 4000K, 24V	LG-FX-XXX-X	115V	1	0.08	0.47
3	EVAPORATOR FAN	AFXXX	115V	1	0.13	0.38
1	COMPRESSOR	---	115V	1	6.92	6.92
2	CONDENSER COIL FAN MOTOR	---	115V	1	0.11	0.23
1	EVAP PAN	---	115V	1	9.57	9.57

CIRCUIT#1 **TOTAL AMPS:** 17.57* **VOLTAGE:**115/1/60 **CONNECTION:** 5-20P
* NOT ALL COMPONENTS RUN CONCURRENTLY AT MAX AMP DRAW. TOTAL RUNNING LOAD WILL REMAIN UNDER AMP MAX.
MODEL: ODC-46AN **APPLICATION:** DELI **BTUH:** 5439 **EVAP TEMP:** 14°F
DEFROST: TIME-OFF, 4/45MIN, 50° TEMP TERMINATION **PACKOUT VOLUME:** 16.86 CUBIC FT.
* R290 (PROPANE) REFRIGERATION AVAILABLE **INTERNAL VOLUME:** 21.38 CUBIC FT.

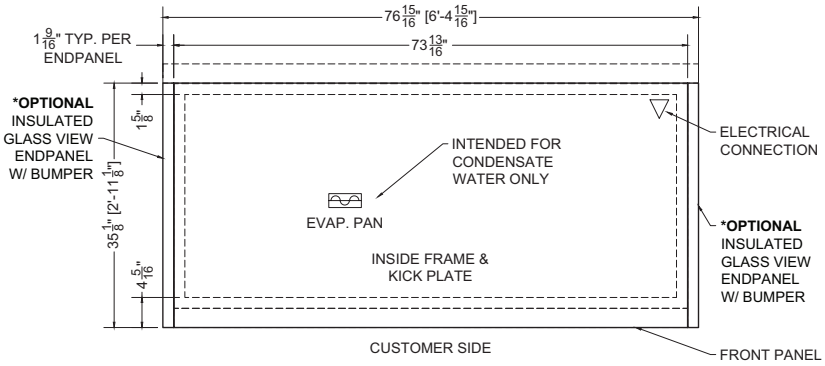

Plan Mechanical View

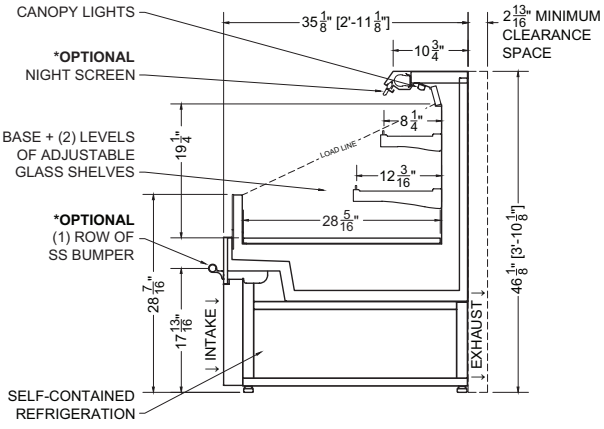

Section View

© 2026 **Southern CaseArts**, an LSI Company. All Rights Reserved Worldwide. Information and specifications subject to change without notice. All values are design or typical values when measured under laboratory conditions.

08.2-ODC-46AN-S | Marquette Open Deck Merchandiser

QTY	DESCRIPTION	PART NUMBER	VOLTAGE	PHASE	AMPS	TOTAL AMPS
6	45” LED 4000K, 24V	LG-FX-XXX-X	115V	1	0.11	0.64
4	EVAPORATOR FAN	AFXXX	115V	1	0.12	0.50
1	COMPRESSOR	---	115V	1	11.76	11.76
2	CONDENSER COIL FAN MOTOR	---	115V	1	0.11	0.23
1	EVAP PAN	---	115V	1	9.57	9.57

CIRCUIT#1 **TOTAL AMPS:** 22.70 **VOLTAGE:**115/1/60 **CONNECTION:** 5-30P
MODEL: ODC-46AN **APPLICATION:** DELI **BTUH:** 7251 **EVAP TEMP:** 14°F
DEFROST: TIME-OFF, 4/45MIN, 50° TEMP TERMINATION **PACKOUT VOLUME:** 22.48 CUBIC FT.
* R290 (PROPANE) REFRIGERATION AVAILABLE **INTERNAL VOLUME:** 28.51 CUBIC FT.

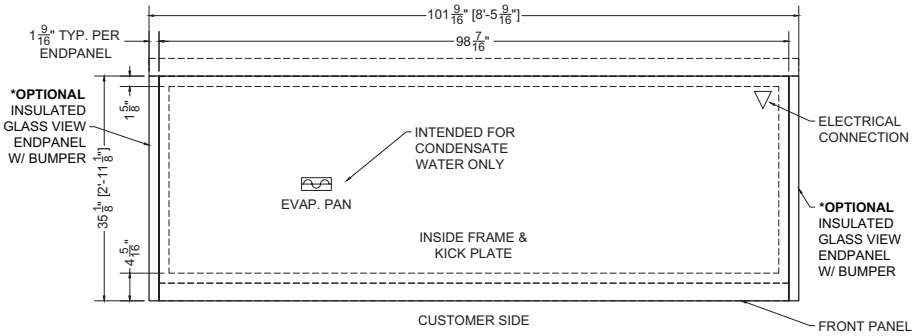

Plan Mechanical View

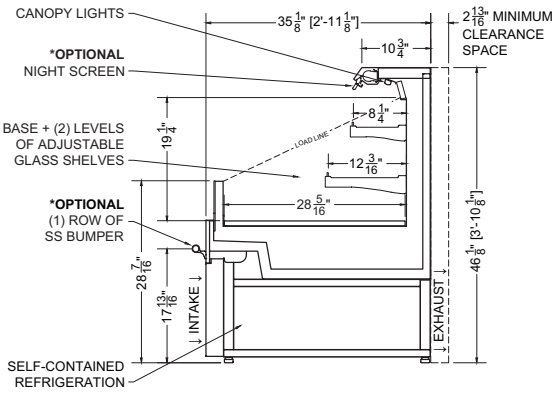

Section View

For more information on the Marquette Open Deck Merchandiser, contact one of our **Southern CaseArts** representatives or check out our website to learn more about all of the products offered by **Southern CaseArts.**

© 2026 **Southern CaseArts**, an LSI Company. All Rights Reserved Worldwide. Information and specifications subject to change without notice. All values are design or typical values when measured under laboratory conditions.