SOUTHERN CaseArts
An LSI Company

Project Name _____
Model # _____ Qty _____ Item # _____
Approval _____ AIA# _____ SIS# _____

Mystic
Combination Freezer | Frozen
MDD-81TSCF-S



southerncasearts.com | 800.552.6283



OVERVIEW

The **Mystic Combination Freezer** from **Southern CaseArts** is a versatile addition to your frozen food area. Available in three lengths, this unique case offers both swing door access and sliding door access in a single freezer. The top features glass swing doors, two adjustable wire shelves and vertical display LED lighting. The bottom of this self-contained freezer has a single glass front bunker with sliding flat glass doors for easy customer access to frozen foods and ice cream.

STANDARD FEATURES

- **Nominal Length:** 4.1', 6.2' & 8.2'
- **Interior Lighting:** 4000K LED lights
- **Shelving:** 2 adjustable wire shelves
- Self-contained
- **Exterior:** Glass and black powder coat

PRODUCT CATEGORIES

Frozen

Ice Cream

© 2026 **Southern CaseArts**, an LSI Company. All Rights Reserved Worldwide. Information and specifications subject to change without notice. All values are design or typical values when measured under laboratory conditions.

04.1-MDD-81TSCF-S | Mystic Combination Freezer

QTY	DESCRIPTION	PART NUMBER	VOLTAGE	PHASE	AMPS	TOTAL AMPS	
4	22" LED 4000K, 24V	LG-FX-XXX-X	208-230V	1	0.32	1.28	
1	45" LED 4000K, 24V	LG-FX-XXX-X	208-230V	1	0.50	0.50	
4	EVAPORATOR FAN	AFXXX	208-230V	1	0.10	0.40	
1	TOP DEFROST HEATERS	---	208-230V	1	3.68	3.68	
1	BOTTOM DEFROST HEATERS	---	208-230V	1	5.77	5.77	
1	TOP COMPRESSOR	---	208-230V	1	2.73	2.73	*NOT INCLUDED IN TOTAL
1	BOTTOM COMPRESSOR	---	208-230V	1	2.70	2.70	*NOT INCLUDED IN TOTAL
4	CONDENSER COIL FAN MOTOR	---	208-230V	1	0.10	0.40	
1	EVAP PAN	---	208-230V	1	3.18	3.18	

CIRCUIT#1 **TOTAL AMPS:** 15.21* **VOLTAGE:** 208-230/1/60 **CONNECTION:** HARDWIRED
* NOT ALL ELECTRICAL COMPONENTS RUN CONCURRENTLY (COMPRESSORS WILL NOT RUN DURING DEFROST)
MODEL: MDD-81TSCF **APPLICATION:** FROZEN **BTUH:** 4214 **EVAP TEMP:** -31°F
DEFROST: TIME-OFF, 4/45MIN, 50° TEMP TERMINATION **TOP PACKOUT VOLUME:** 11.94 CUBIC FT.
* R290 (PROPANE) REFRIGERATION AVAILABLE **TOP INTERNAL VOLUME:** 13.64 CUBIC FT.
BOTTOM PACKOUT VOLUME: 6.55 CUBIC FT.
BOTTOM INTERNAL VOLUME: 10.91 CUBIC FT.

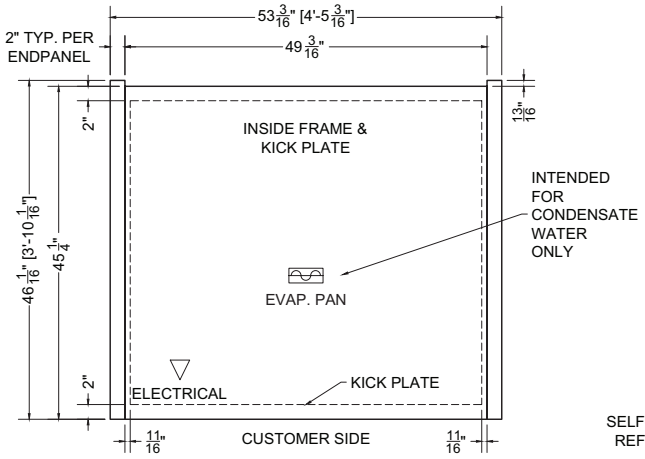

Plan Mechanical View

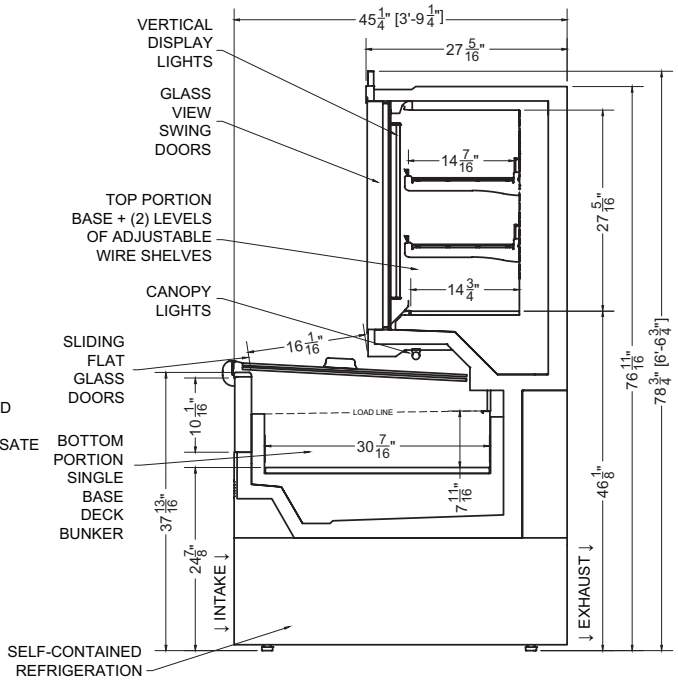

Section View

© 2026 **Southern CaseArts**, an LSI Company. All Rights Reserved Worldwide. Information and specifications subject to change without notice. All values are design or typical values when measured under laboratory conditions.

06.2-MDD-81TSCF-S | Mystic Combination Freezer

QTY	DESCRIPTION	PART NUMBER	VOLTAGE	PHASE	AMPS	TOTAL AMPS	
6	22" LED 4000K, 24V	LG-FX-XXX-X	208-230V	1	0.32	1.93	
2	33" LED 4000K, 24V	LG-FX-XXX-X	208-230V	1	0.38	0.75	
6	EVAPORATOR FAN	AFXXX	208-230V	1	0.10	0.60	
1	TOP DEFROST HEATERS	---	208-230V	1	5.52	5.52	
1	BOTTOM DEFROST HEATERS	---	208-230V	1	8.66	8.66	
2	TOP COMPRESSOR	---	208-230V	1	2.70	5.40	*NOT INCLUDED IN TOTAL
2	BOTTOM COMPRESSOR	---	208-230V	1	2.53	5.06	*NOT INCLUDED IN TOTAL
8	CONDENSER COIL FAN MOTOR	---	208-230V	1	0.10	0.80	
1	EVAP PAN	---	208-230V	1	5.00	5.00	

CIRCUIT#1 **TOTAL AMPS:** 23.26* **VOLTAGE:** 208-230/1/60 **CONNECTION:** HARDWIRED
* NOT ALL ELECTRICAL COMPONENTS RUN CONCURRENTLY (COMPRESSORS WILL NOT RUN DURING DEFROST)
MODEL: MDD-81TSCF **APPLICATION:** FROZEN **BTUH:** 7738 **EVAP TEMP:** -31°F
DEFROST: TIME-OFF, 4/45MIN, 50° TEMP TERMINATION **TOP PACKOUT VOLUME:** 17.91 CUBIC FT.
* R290 (PROPANE) REFRIGERATION AVAILABLE **TOP INTERNAL VOLUME:** 20.47 CUBIC FT.
BOTTOM PACKOUT VOLUME: 9.83 CUBIC FT.
BOTTOM INTERNAL VOLUME: 16.37 CUBIC FT.

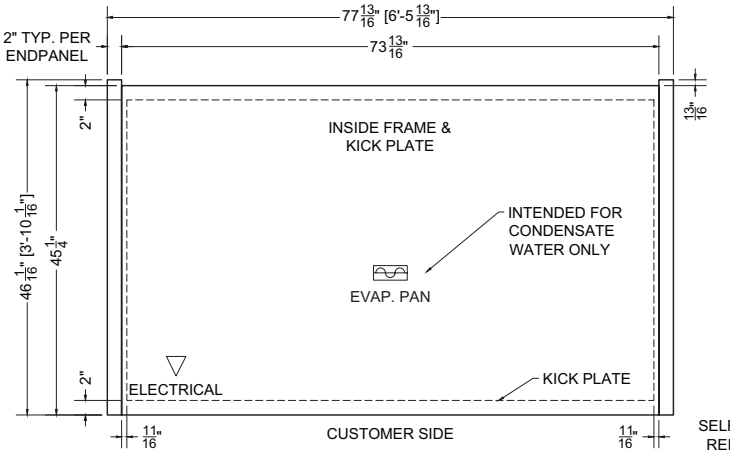

Plan Mechanical View

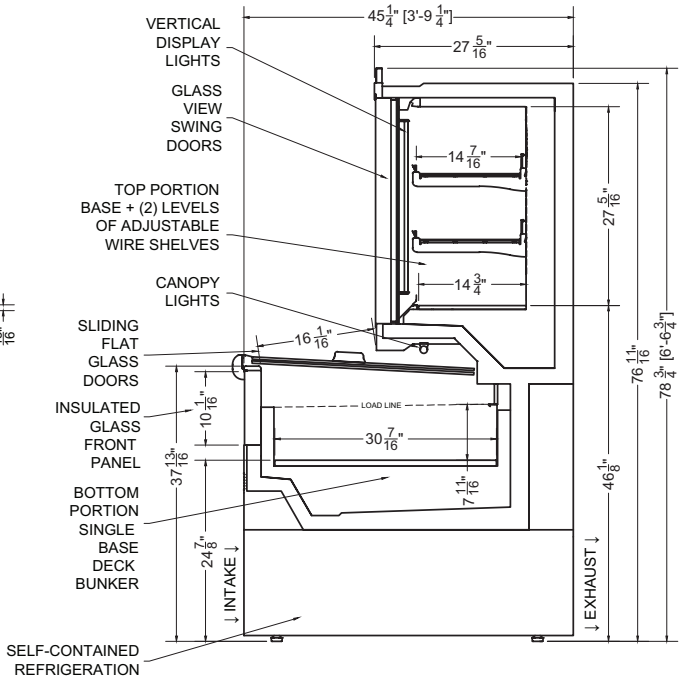

Section View

© 2026 **Southern CaseArts,** an LSI Company. All Rights Reserved Worldwide. Information and specifications subject to change without notice. All values are design or typical values when measured under laboratory conditions.

08.2-MDD-81TSCF-S | Mystic Combination Freezer

QTY	DESCRIPTION	PART NUMBER	VOLTAGE	PHASE	AMPS	TOTAL AMPS	
8	22" LED 4000K, 24V	LG-FX-XXX-X	208-230V	1	0.32	2.57	
2	45" LED 4000K, 24V	LG-FX-XXX-X	208-230V	1	0.50	1.00	
9	EVAPORATOR FAN	AFXXX	208-230V	1	0.10	0.90	
1	TOP DEFROST HEATERS	---	208-230V	1	7.36	7.36	
1	BOTTOM DEFROST HEATERS	---	208-230V	1	11.55	11.55	
2	TOP COMPRESSOR	---	208-230V	1	2.73	5.46	*NOT INCLUDED IN TOTAL
2	BOTTOM COMPRESSOR	---	208-230V	1	2.70	5.40	*NOT INCLUDED IN TOTAL
4	CONDENSER COIL FAN MOTOR	---	208-230V	1	0.10	0.40	
1	EVAP PAN	---	208-230V	1	5.00	5.00	

CIRCUIT#1 **TOTAL AMPS:** 28.78* **VOLTAGE:** 208-230/1/60 **CONNECTION:** HARDWIRED
* NOT ALL ELECTRICAL COMPONENTS RUN CONCURRENTLY (COMPRESSORS WILL NOT RUN DURING DEFROST)
MODEL: MDD-81TSCF **APPLICATION:** FROZEN **BTUH:** 8428 **EVAP TEMP:** -31°F
DEFROST: TIME-OFF, 4/45MIN, 50° TEMP TERMINATION **TOP PACKOUT VOLUME:** 23.87 CUBIC FT.
* R290 (PROPANE) REFRIGERATION AVAILABLE **TOP INTERNAL VOLUME:** 27.29 CUBIC FT.
BOTTOM PACKOUT VOLUME: 13.10 CUBIC FT.
BOTTOM INTERNAL VOLUME: 21.83 CUBIC FT.

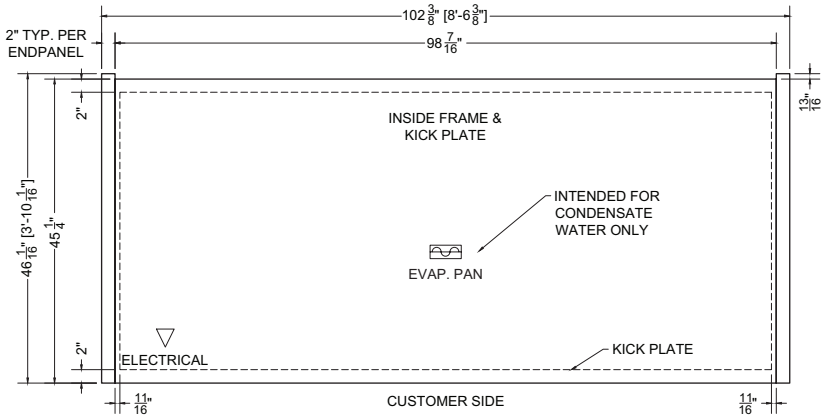

Plan Mechanical View

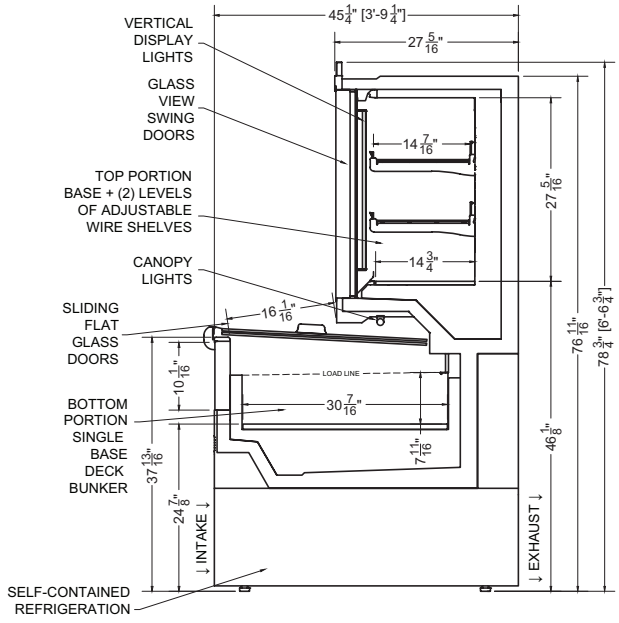

Section View

For more information on the Mystic Combination Freezer, contact one of our **Southern CaseArts** representatives or check out our website to learn more about all of the products offered by **Southern CaseArts.**

© 2026 **Southern CaseArts,** an LSI Company. All Rights Reserved Worldwide. Information and specifications subject to change without notice. All values are design or typical values when measured under laboratory conditions.