SOUTHERN CaseArts
An LSI Company

Project Name _____
Model # _____ Qty _____ Item # _____
Approval _____ AIA# _____ SIS# _____

Platte
Multideck Merchandiser with Doors | Cold
MDD-87ADM-R



southerncasearts.com | 800.552.6283

OVERVIEW

The **Platte Multideck Merchandiser** with doors from **Southern CaseArts** is just the refrigerated case you've been looking for. With four width options featuring 2-6 glass view doors, this energy efficient case included LED lighting in the canopy and vertically that will make it impossible for customers to miss the merchandise. This case is ideal for meat, cheese/dairy, milk, bakery, prepared foods, snacks/sandwiches and chilled beverages.

STANDARD FEATURES

- **Nominal Length:** 4.1', 6.2', 8.2' & 12.3'
- **Interior Lighting:** 4000K LED
- **Shelving:** 5 adjustable shelves
- **Doors:** Glass view swing doors
- Remote
- **Exterior:** Black powder coat

PRODUCT CATEGORIES

Meat | Deli | Cheese/ Dairy | Milk | Snacks/ Sandwiches

Bakery | Chilled Beverages | Prepared Food

04.1-MDD-87ADM-R | Platte Multideck Merchandiser with Doors (2)

QTY	DESCRIPTION	PART NUMBER	VOLTAGE	PHASE	AMPS	TOTAL AMPS
1	45" LED 4000K, 24V	LG-FX-XXX-X	115V	1	0.50	0.50
2	59" LED 4000K, 24V	LG-FX-XXX-X	115V	1	0.67	1.33
2	EVAPORATOR FAN	AFXXX	115V	1	0.20	0.40
1	DEFROST HEATERS	---	115V	1	2.17	2.17

CIRCUIT#1 (LIGHTS) **TOTAL AMPS:** 1.83 **VOLTAGE:** 115/1/60 **CONNECTION:** HARDWIRED
CIRCUIT#2 (FANS) **TOTAL AMPS:** 0.40 **VOLTAGE:** 115/1/60 **CONNECTION:** HARDWIRED
CIRCUIT#3 (DEFROST) **TOTAL AMPS:** 2.17 **VOLTAGE:** 115/1/60 **CONNECTION:** HARDWIRED
MODEL: MDD-87ADM **APPLICATION:** DELI **BTUH:** 3241 **EVAP TEMP:** 14°F
DEFROST: TIME-OFF, 4/45MIN, 50° TEMP TERMINATION **PACKOUT VOLUME:** 54.84 CUBIC FT.
INTERNAL VOLUME: 67.16 CUBIC FT.

© 2026 **Southern CaseArts**, an LSI Company. All Rights Reserved Worldwide. Information and specifications subject to change without notice. All values are design or typical values when measured under laboratory conditions.

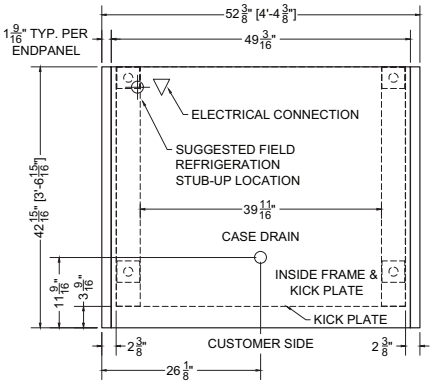

Plan Mechanical View

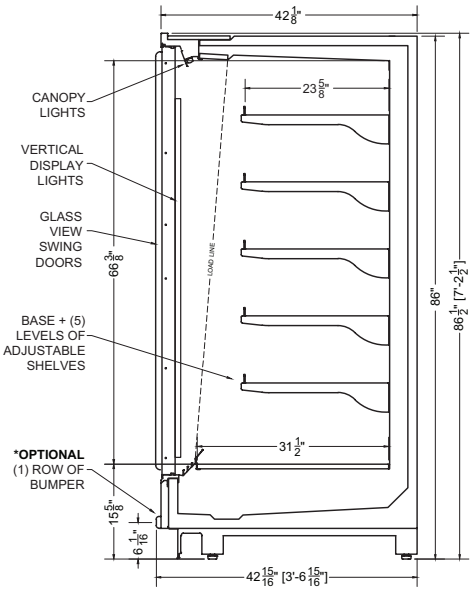

Section View

06.2-MDD-87ADM-R | Platte Multideck Merchandiser with Doors (3)

QTY	DESCRIPTION	PART NUMBER	VOLTAGE	PHASE	AMPS	TOTAL AMPS
2	33" LED 4000K, 24V	LG-FX-XXX-X	115V	1	0.38	0.75
4	59" LED 4000K, 24V	LG-FX-XXX-X	115V	1	0.67	2.67
3	EVAPORATOR FAN	AFXXX	115V	1	0.20	0.60
1	DEFROST HEATERS	---	115V	1	3.48	3.48

CIRCUIT#1 (LIGHTS) **TOTAL AMPS:** 3.42 **VOLTAGE:** 115/1/60 **CONNECTION:** HARDWIRED
CIRCUIT#2 (FANS) **TOTAL AMPS:** 0.60 **VOLTAGE:** 115/1/60 **CONNECTION:** HARDWIRED
CIRCUIT#3 (DEFROST) **TOTAL AMPS:** 3.48 **VOLTAGE:** 115/1/60 **CONNECTION:** HARDWIRED
MODEL: MDD-87ADM **APPLICATION:** DELI **BTUH:** 4862 **EVAP TEMP:** 14°F
DEFROST: TIME-OFF, 4/45MIN, 50° TEMP TERMINATION **PACKOUT VOLUME:** 82.26 CUBIC FT.
INTERNAL VOLUME: 100.75 CUBIC FT.

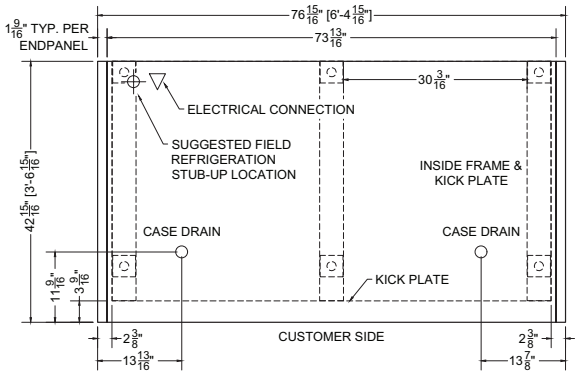

Plan Mechanical View

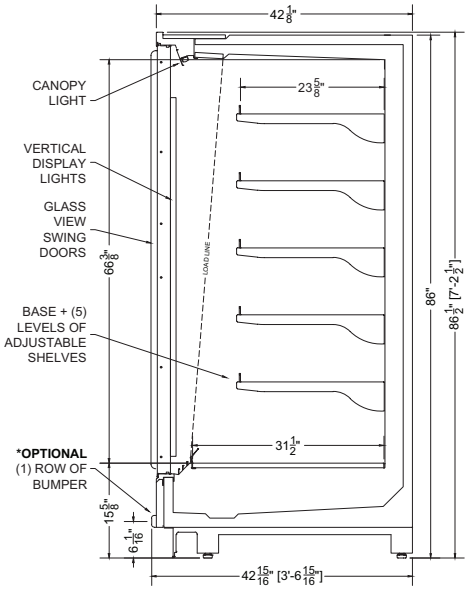

Section View

© 2026 **Southern CaseArts**, an LSI Company. All Rights Reserved Worldwide. Information and specifications subject to change without notice. All values are design or typical values when measured under laboratory conditions.

08.2-MDD-87ADM-R | Platte Multideck Merchandiser with Doors (4)

QTY	DESCRIPTION	PART NUMBER	VOLTAGE	PHASE	AMPS	TOTAL AMPS
2	45" LED 4000K, 24V	LG-FX-XXX-X	115V	1	0.50	1.00
4	59" LED 4000K, 24V	LG-FX-XXX-X	115V	1	0.67	2.67
4	EVAPORATOR FAN	AFXXX	115V	1	0.20	0.80
1	DEFROST HEATERS	---	115V	1	5.22	5.22

CIRCUIT#1 (LIGHTS) **TOTAL AMPS:** 3.67 **VOLTAGE:** 115/1/60 **CONNECTION:** HARDWIRED
CIRCUIT#2 (FANS) **TOTAL AMPS:** 0.80 **VOLTAGE:** 115/1/60 **CONNECTION:** HARDWIRED
CIRCUIT#3 (DEFROST) **TOTAL AMPS:** 5.22 **VOLTAGE:** 115/1/60 **CONNECTION:** HARDWIRED
MODEL: MDD-87ADM **APPLICATION:** DELI **BTUH:** 6483 **EVAP TEMP:** 14°F
DEFROST: TIME-OFF, 4/45MIN, 50° TEMP TERMINATION **PACKOUT VOLUME:** 109.68 CUBIC FT.
INTERNAL VOLUME: 134.33 CUBIC FT.

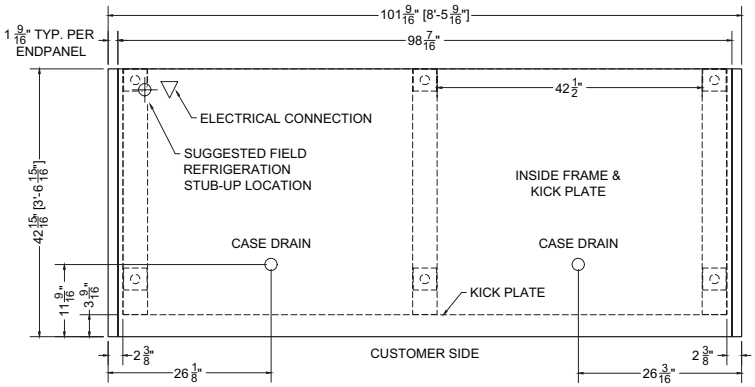

Plan Mechanical View

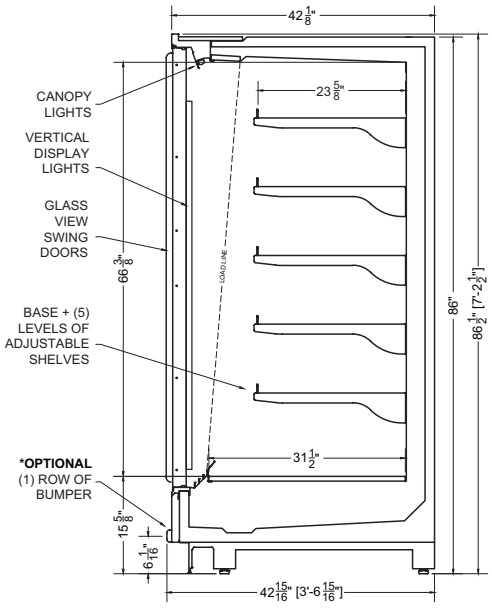

Section View

12.3-MDD-87ADM-R | Platte Multideck Merchandiser with Doors (6)

QTY	DESCRIPTION	PART NUMBER	VOLTAGE	PHASE	AMPS	TOTAL AMPS
3	45" LED 4000K, 24V	LG-FX-XXX-X	115V	1	0.50	1.50
6	59" LED 4000K, 24V	LG-FX-XXX-X	115V	1	0.67	4.00
6	EVAPORATOR FAN	AFXXX	115V	1	0.20	1.20
1	DEFROST HEATERS	---	115V	1	6.96	6.96

CIRCUIT#1 (LIGHTS) **TOTAL AMPS:** 5.50 **VOLTAGE:** 115/1/60 **CONNECTION:** HARDWIRED
CIRCUIT#2 (FANS) **TOTAL AMPS:** 1.20 **VOLTAGE:** 115/1/60 **CONNECTION:** HARDWIRED
CIRCUIT#3 (DEFROST) **TOTAL AMPS:** 6.96 **VOLTAGE:** 115/1/60 **CONNECTION:** HARDWIRED
MODEL: MDD-87ADM **APPLICATION:** DELI **BTUH:** 9724 **EVAP TEMP:** 14°F
DEFROST: TIME-OFF, 4/45MIN, 50° TEMP TERMINATION **PACKOUT VOLUME:** 164.52 CUBIC FT.
INTERNAL VOLUME: 201.49 CUBIC FT.

© 2026 **Southern CaseArts,** an LSI Company. All Rights Reserved Worldwide. Information and specifications subject to change without notice. All values are design or typical values when measured under laboratory conditions.

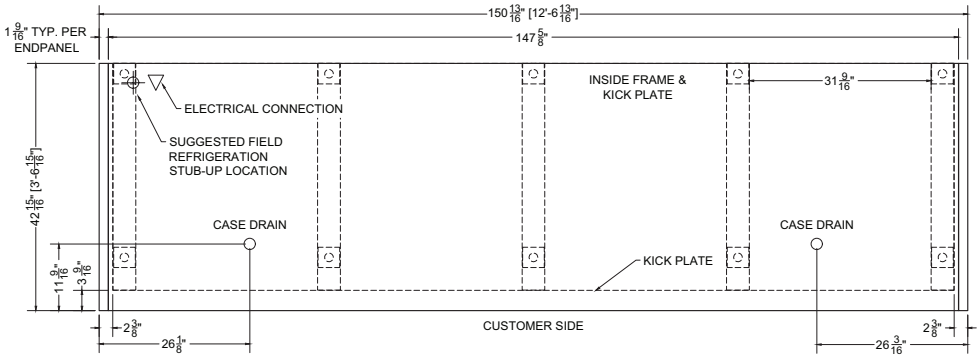

Plan Mechanical View

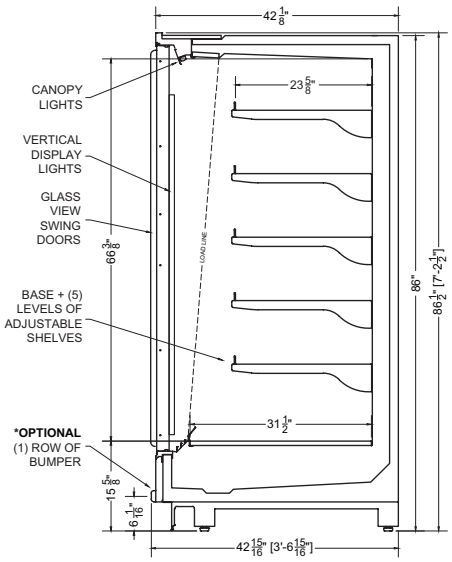

Section View

For more information on the Platte Multideck with Doors, contact one of our **Southern CaseArts** representatives or check out our website to learn more about all of the products offered by **Southern CaseArts.**

© 2026 **Southern CaseArts,** an LSI Company. All Rights Reserved Worldwide. Information and specifications subject to change without notice. All values are design or typical values when measured under laboratory conditions.